Part-2: Supply Requirements

Section 6 – Schedule of Supply

The Schedule of Supply consists of six parts:

1. Lot-1
1-1. List of Goods and Related Services
1-2. Delivery and Completion Schedule
2. Lot-2
2-1. List of Goods and Related Services
2-2. Delivery and Completion Schedule
3. Technical Specifications
4. Drawings
5. Inspections and Tests
6. Packing, Marking and Drawings Instructions for box design No. 1

Detail Address of Destination as below:

Sl No.	Name of ware house	Address
01	Central ware house, Dhaka.	Polashbari, Nabinagor,Savar, Dhaka -1344
02	Central ware house, Chittagong.	Fojdarhat, Chittagong.
03	Central ware house, Khulna.	Shiromoni, Khulna.

Lot-1

1-1. List of Goods and Related Services

Name of Bidder _____

Item : Conductor, ACSR, Bare, Unit in KM.

Package Number - URIDS(E)-G-11, Lot No-1. URIDS(E)-G-11-01 Page ___ of ___

Line Item No.	Description of Goods	Quantity	Physical unit	Quantity to deliver at Final Destination (BREB Warehouse)			Delivery (to the final destination) period from the date of contract signing			
				70% of the quantity against each item at BREB central ware house Khulna	15% of the quantity against each item at BREB central ware house Dhaka	15% of the quantity against each item at BREB central ware house Chittagong	Latest Delivery Date (1st phase)*	Latest Delivery Date (2nd phase)*	Bidder's offered Delivery date [to be provided by the bidder]	
									1st phase	2nd phase
1	2	3	4	5	6	7	8	9	10	11
D-1	Conductor, #3, acsr (6/1, swallow)	10000	KM	7000	1500	1500	50% of each item within 20 weeks	Remaining 50% of each item within 40 weeks from the date of contract signing		
D-2	Conductor, #1/0, (6/1), acsr	11000	KM	7700	1650	1650				
D-3	Conductor, #4/0, (6/1), acsr	1600	KM	1120	240	240				
D-4	Conductor, ground # 4 Aluminium	250	KM	175	38	37				
D-5	Conductor, tie, # 4 Aluminium	300	KM	210	45	45				
D-6	Conductor, #6 Copper, bare	92	KM	64.4	13.8	13.8				
D-28	Conductor, # 477mcm (26/7) acsr	1000	KM	700	150	150				

Name of Bidder:
Signature of Bidder:
Date:

Lot-2

2-1 List of Goods and Related Services

Name of Bidder _____

Item: Conductor, Insulated, 600 Volt, 11KV, Unit in KM.

IFB Number - URIDS(E)-G-11, Lot 2: No. URIDS(E)-G-11-02 Page ___ of ___

Line Item No.	Description of Goods	Quantity	Physical unit	Quantity to deliver at Final Destination (BREB Warehouse)			Delivery (to the final destination) period from the date of contract signing			
				70% of the quantity against each item at BREB central ware house Khulna	15% of the quantity against each item at BREB central ware house Dhaka	15% of the quantity against each item at BREB central ware house Chittagong	Latest Delivery Date (1st phase)*	Latest Delivery Date (2nd phase)*	Bidder's offered Delivery date [to be provided by the bidder]	
									1st phase	2nd phase
1	2	3	4	5	6	7	8	9	10	11
D-11	Conductor # 6 duplex	9700	KM	6790	1455	1455	50% of each item within 20 weeks	Remaining 50% of each item within 40 weeks from the date of contract signing		
D-12	Conductor # 3 duplex	6500	KM	4550	975	975				
D-14	Conductor # 3 Quaduplex	750	KM	525	112	113				
D-15	Conductor 1/0 Quaduplex	73	KM	51	11	11				
D-25	Conductor # 6 Quaduplex	106	KM	74	16	16				
D-59	Conductor Insulated # 2 ACSR	150	KM	105	23	22				
D-61	Conductor Insulated # 1/0 ACSR	200	KM	140	30	30				
D-62	Conductor Insulated # 4/0 ACSR	200	KM	140	30	30				

Name of Bidder:
Signature of Bidder:
Date:

3 & 5 . Technical Specifications & Drawings For Conductor.

For

Lot-1: URIDS(E)-G-11-01: Conductor, Bare

SPECIFICATION SUBMISSION AND COMPLIANCE SHEET

(To be filled by the Tenderer)

Package No: URIDS(E)-G-11
Sub-Package No: URIDS(E)-G-11-01

Item: Conductor, ACSR, Bare, unit in km.

Item No.	Technical Particulars	REB specification	Guaranteed Specification
D-1 (#3 ACSR)	Manufacturer's name :	To be mentioned	
	a) Standard	ASTM B232, CLASS A	
	b) Material standard	Open hearth steel, ASTM B 498 & Aluminum rods, ASTM B 230	
	c) Number of strands	Aluminum = 6, steel = 1	
	d) Diameter of each strand	2.38 mm	
	e) DC resistance at 20^0 C (Max)	1.0737 Ohm/Km	
	f) Direction of lay	R.H.D	
	g) Lay factor	(12 to 14.5) x dia	
	h) Ultimate tensile strength (min)	1014 Kg	
	i) Packing length per reel (nominal)	2408 m (+/-5%)	
	j) Weight	108 Kg/Km	
	k) Reel Size	NRX: 30:22	
	l) Type of reel	Reel from aluminum, steel or export qauality preservative treated woodas per fig.-1A, 1B of specification	
	m) Test Report	Shall submit all the routine & type test reports of offered items	
	n) Test Laboratory	Report from an Independent Testing Laboratory	
D-2 (1/0 ACSR)	Manufacturer's name :	To be mentioned	
	a) Standard	ASTM B232, CLASS A	
	b) Material standard	Open hearth steel, ASTM B 498 & Aluminum rods, ASTM B 230	
	c) Number of strands	Aluminum = 6, steel = 1	
	d) Diameter of each strand	3.37 mm	
	e) DC resistance at 20^0 C (Max)	0.5350 Ohm/Km	
	f) Direction of lay	R.H.D	
	g) Lay factor	(12 to 14.5) x dia	
	h) Ultimate tensile strength (min)	1926 Kg	
	i) Packing length per reel (nominal)	1006 m (+/-5%)	
	j) Weight	216 Kg/Km	
	k) Reel Size	NRX: 30:22	
	l) Type of reel	Reel from aluminum, steel or export qauality preservative treated wood as per fig.-1A, 1B of specification	
	m) Test Report	Shall submit all the routine & type test reports of offered items	
	n) Test Laboratory	Report from an Independent Testing Laboratory	
D-3 (4/0 ACSR)	Manufacturer's name :	To be mentioned	
	a) Standard	ASTM B232, CLASS A	
	b) Material standard	Open hearth steel, ASTM B 498 & Aluminum rods, ASTM B 230	
	c) Number of strands	Aluminum = 6, steel = 1	
	d) Diameter of each strand	4.77 mm	
	e) DC resistance at 20^0 C (Max)	0.2672 Ohm/Km	
	f) Direction of lay	R.H.D	
	g) Lay factor	(12 to 14.5) x dia	
	h) Ultimate tensile strength (min)	3760 Kg	
	i) Packing length per reel (nominal)	579 m (+/-5%)	
	j) Weight	433 Kg/Km	
	k) Reel Size	NRX: 30:22	
	l) Type of reel	Reel from aluminum, steel or export qauality preservative treated wood as per fig.-1A, 1B of specification	
	m) Test Report	Shall submit all the routine & type test reports of offered items	
	n) Test Laboratory	Report from an Independent Testing Laboratory	

C8\D\URIDS(E)-G-02-01(D- item, Bare).xls

Item No.	Technical Particulars	REB specification	Guaranteed Specification
D-4 D-5	Manufacturer's name :	To be mentioned	
	a) Standard	ASTM B233, CLASS A	
	b) Material standard	Aluminum wire ASTM B609 B531, B557, ASTM B193, B396	
	c) Number of strands	1	
	d) Diameter of strand in cm	0.5189 cm	
	e) DC resistance at 20^0 C (Max)	1.3363 Ohm/km	
	f) Density of the Aluminum alloy	2.705 gm/cm^3	
	h) Breaking strength (kg)	D-4=342kg (Min) D-5=167kg(Max)	
	i) Packing length per reel (nominal)	305 m (+/-5%)	
	j) Weight	57.2 Kg/Km	
	k) Packing	As per clause no. 10 of specification for D-4 and As per clause no. 9 of specification for D-5	
	m) Test Report	Shall submit tensile strength test as per ASTM B557	
D-6	Manufacturer's name :	To be mentioned	
	a) Material standard	ASTM B3, B8 ASTM B193	
	c) Number of strands	1	
	d) Wire size	6 AWG	
	e) Diameter of strand in cm	0.41148 cm	
	f) DC resistance at 25^0 C (Max)	1.404 Ohm/km	
	g) Density of the Copper alloy	8.89 gm/cm^3	
	h) Maximum breaking strength (kg)	346 kg	
	i) Packing length per reel (nominal)	153m (+/-5%)	
	j) Weight	118.4 Kg/Km	
	k) Packing	As per clause no. 9 of specification	
	m) Test Report	Shall submit electrical characteristics test as per ASTM B193	
D-28 (477 MCM)	Manufacturer's name :	To be mentioned	
	a) Standard	ASTM B232, CLASS A	
	b) Material standard	Open hearth steel, ASTM B 498 & Aluminum rods, ASTM B 230	
	c) Number of strands	Aluminum = 26, steel = 7	
	d) Diameter of each strand in cm i) Aluminum ii) Steel	0.3439 CM 0.2674 CM	
	e) DC resistance at 20^0 C (Max)	0.1168 Ohm/km	
	f) Direction of lay	R.H.D	
	g) Lay factor	(12 to 14.5) x dia	
	h) Altimate tensile strength (min)	8845 kg	
	i) Packing length per reel (nominal)	762 m (+/-5%)	
	j) Weight	975 Kg/Km	
	k) Reel Size	NRX: 42:28	
	l) Type of reel	Reel from aluminum, steel or export qauality preservative treated wood as per fig.-1A, 1B of specification	
	m) Test Report	Shall submit all the routine & type test reports of offered items	
	n) Test Laboratory	Report from an Independent Testing Laboratory	
Test Report		Shall submit all the routine & type test reports of offered items The steel wire shall be tested in accordance with Sections 5, 6 and 10 of ASTM B498. The manufacturer shall conduct conductor tests and inspections in accordance with Section 16 of ASTM B23	
Test Laboratory		Report from an Independent Testing Laboratory	

Signature of Tenderer:
Name:
In the capacity of:

C8\D\URIDS(E)-G-02-01(D- item, Bare).xls

23/11/2016
(সুফল চন্দ্র দে)
সহকারী প্রকৌশলী
এমপিএসএস, বাপবিবো,ঢাকা।

The bottom and inside flanges shall be covered by a sheet of polyethylene or similar plastic material before the bare ACSR conductor is wound and the top will be covered by similar material after winding of conductor. Paper liners and wrapping are prohibited.

4. ALUMINUM WIRES

1. Materials
   The round aluminum wire shall be drawn from rods that conform to the chemical requirements of Table 2 , ASTM B230.

2. Testing
   The aluminum rods shall have tensile strengths depending on temper as shown in Table 1 of ASTM B233.

3. Resistivity
   The electrical resistivity limits and values of the aluminum rods are presented in Table 4 of ASTM B230.

4. General
   Aluminum wires used shall meet the requirements of ASTM B230.

5. LAY FACTOR

The lay factor of the aluminum wire shall be not less than 12 nor more than 14.5 times the outside diameter of the conductor. The preferred lay factor is 13 times the diameter, with the lay in a right hand direction.

6. CONSTRUCTION

The number and diameter of aluminum and steel wires and the stranding shall conform to the requirements of Tables 1, 2 and 3 of ASTM B232.

7. CONDUCTOR STRENGTH

The rated conductor strength shall be the aggregate strength of the steel and aluminum wires determined by the methods described in Section 9.1 of ASTM B232.

8. MATERIAL DENSITY

In accordance with Section 10 of ASTM B232, the density of aluminum wire is assumed to be 2.705 gm/cm^3 (0.0975 1b/in^3) at 20^{0}C on the basis of 99.45 percent purity. The density of galvanized steel wire is assumed to be 7.78 gm/Cm^3 (0.281 1b/in^3) at 20^{0}C.

9. WEIGHT AND ELECTRICAL RESISTANCE

The weight and electrical resistance of the stranded conductor shall be determined by the methods described in Section 11 of ASTM B232.

10. VARIATION IN AREA

Limits of variation of the cross section of the aluminum wires shall be as described in Section 12 of ASTM B232.

ITEM: D-1, D-2, D-3, D-26, D-27, D-28 & D-32

11. CHARACTERISTICS

REB ACSR conductors shall have the following characteristics:

English Unit Equivalents

REB Item	D - 1	D - 2	D - 3	D - 26	D - 27	D - 28	D - 32
Code Name	Swallow	Raven	Penguin	Oriole	Grosbeak	Hawk	Drake
Size (MCM or AWG)	#3	1/0	4/0	336.4 MCM	636 MCM	477 MCM	795 MCM
Strands, (No. x size, inches)							
Aluminum	6×0.0937	6×0.1327	6×0.1878	30×0.1059	26x 0.1564	26×0.1354	26x0.1749
Steel	1×0.0937	1×0.1327	1×0.1878	7×0.1059	7x 0.1216	7×0.1053	7x0.1360
Overall Diameter (inches)	0.281	0.398	0.563	0.741	0.990	0.858	1.108
DC Resistance (Ohms/mile at 20°C	1.728	0.861	0.430	0.267	0.1409	0.188	0.113
Ultimate Strength (Pounds)	2,235	4,245	8,290	17,340	25,200	19,500	31,500

Metric Unit Equivalents

REB Item	D - 1	D - 2	D - 3	D - 26	D - 27	D - 28	D - 32
Code Name	Swallow	Raven	Penguin	Oriole	Grosbeak	Hawk	Drake
Size (MCM or AWG)	# 3	1/0	4/0	366.4 MCM	636 MCM	477 MCM	795 MCM
Strands, (No. x size, Centimeters)							
Aluminum	6×0.2380	6×0.3370	6×0.4770	30×0.2689	26x 0.3973	26×0.3439	26x0.4442
Steel	1×0.2380	1×0.3370	1×0.4770	7×0.2689	7x 0.3089	7×0.2674	7x0.3454
Overall Diameter (Centimeters)	0.7137	1.0109	1.4300	1.8821	2.5146	2.1793	2.8143
DC Resistance (Ohm/Km at 20°C)	1.0737	0.5350	0.2672	0.1698	0.0876	0.1168	0.0702
Ultimate Strength (kgs)	1,014	1,926	3,760	7,870	11,431	8,845	14,289

12. FINISH

The conductor shall be free of imperfections, sharp protrusions and blemishes not consistent with good commercial practice.

13. INSPECTION

The manufacturer shall conduct conductor tests and inspections in accordance with Section 16 of ASTM B232. REB reserves the right to witness factory tests and inspections and will request test reports. The manufacturer shall also conduct conductor reel tests and inspections and submit test reports before shipment to verify that the reels and lagging comply with the requirements of this standard. REB shall also have the prerogative to inspect conductor reels at any time to insure compliance of this standard. Non- conforming reels and lagging are unacceptable.

14. PACKAGING & SHIPPING

Conductor shall be shipped on non-returnable reels manufactured from " aluminum", "steel" or export quality preservative treated "wood". All reels shall have preservative treated wood lagging. Wood reels and all lagging shall be constructed from new lumber which shall be square sawn, be of smooth surface, with no splits, warps, crooks, loose fibers, decay or insect infestation. The lumber used for wood reels and all lagging shall be preservative treated in accordance with "American wood preservers Associates Standards" and as stipulated below:

Description	Requirements/Methods	AWPA Standards
Lumber:	All softwood species	C1-82, C-2-83 and C16-82
Preservatives: (any one)	Acid Copper Chromate (ACC) Ammoniacal Copper Arsenate (ACA) Chromated Copper Arsenate type C (CCA-C)	P5-83, C1-82, C2-83 and C16-82
Treatment:	Pressure treatment after all carpentry works	C1-82, C2-83 & C16-82
Results of Treatment:		
Penetration:	Minimum 0.4 inches from the surface Of any face	C16-82
Assay Zone:	0-0.6 inch zone	C16-82
Retention:	0.62 Pcf for ACC, 0.40 Pcf for ACA and CCA. Copper shall be calculated as Cuo, Chromium as Cro_3 and Arsenic as AS_2O_5	C1-82, C2-83 & C16-82
Tests:	1) Wet ash analysis for oxides 2) X-Ray 3) Atomic Absorption	A7-75, A2-85 section 2,5,6 A9-86 A7-75 and A11-83

A typical wooden reel and lagging are shown in Figures 1A and 1B and shall have the following dimensions:

Reel Dimensions In Centimeters

Reel Designation	Flange Diameter	Drum Diameter	Width Inside	Width Outside	Arbor Hole Diameter
NRX 30.22	76.2	45.8	55.8	64.8	7.62
NRX 42.28	106.7	53.3	71.1	80.0	7.62
NRX 60.28	152.4	71.1	71.1	80.0	7.62

Reel Dimensions In Inches

Reel Designation	Flange Diameter	Drum Diameter	Width Inside	Width Outside	Arbor Hole Diameter
NRX 30.22	30	18	22	25.5	3
NRX 42.28	42	21	28	31.5	3
NRX 60.28	60	28	28	31.5	3

The nominal length and weight of REB conductors shipped on NRX reels is as follows:

The nominal length and weights (Metric Units)

REB Item No	Reel Size	Weight Kg/Km	Nominal Length (Mtr)	Weight of Nominal Length (Kg)
D-1	30.22	108	2,408	260
D-2	30.22	216	1,006	217
D-3	30.22	433	579	251
D-26	42.28	783	914	716
D-27	60.28	1301	1321	1719
D-28	42.28	975	762	743
D-32	60.28	1627	1058	1721

Conductor Length and Weights (English Units)

REB Item No	Reel Size	Weight lb/Mile	Nominal Length (ft)	Weight of Nominal Length (lb)
D-1	30.22	382	7,900	570
D-2	30.22	767	3,300	480
D-3	30.22	1,537	1,900	553
D-26	42.28	2778	3000	1578
D-27	60.28	4614.72	4335	3789
D-28	42.28	3,467	2,500	1,638
D-32	60.28	5771	3470	3793

The reel shall be prepared for shipping by:

1. Nailing one inch(1") lagging strips to the flanges using two (2) eight-penny (8d) nails at each end.
2. Binding the lagging strips circumferentially with at least four (4) galvanized steel strips or galvanized steel wire(figure 1B).

Each reel shall contain one length of conductor. REB shall permit a variation in length of plus or minus five percent (+ / - 5%) of the nominal shipping length.

REB shall also allow an amount of conductor not exceeding ten percent (10%) of the total weight of the order to be shipped in random lengths none kof which shall be shorter than fifty percent (50%) of the nominal shipping length.

Metal tags shall be attached to the inside and outside of the reel containing the following information:

1. Gross and net weights.
2. ACSR conductor size, stranding.
3. Actual length in meters.
4. Catalog number.
5. Manufacturer's name and/or identification symbol.
6. Shipping data.
7. REB item number.

15. OTHER STANDARDS

The performance requirements of preassembled aluminum cables, based on other internationally recognized standards, are acceptable only if the requirements of sych standards are equivalent to or exceed the requirements quoted in this document.

16. BIBLIOGRAPHY OF REFERENCE STANDARDS: (Latest Edition)

1. ASTM B232: "standard Specification for Concentric- Lay- Stranded Aluminum Conductors, Coated – Steel Reinforced (ACSR)".

2. ASTM B498: "Standard Specification for Zinc Coated (Galvanized) Steel Core wire for Aluminum Conductors, Steel Reinforced (ACSR)".

3. ASTM B230: "Standard Specification for Aluminum 1350-H19 wire for Electrical purposed.

4. ASTM B233: "Standard Specification for Aluminum 1350 Redraw Rod for Electrical purposes".

5. AWPA C1: "Standards for preservative Treatment by pressure process- All Timber products".

6. AWPA P5: "Standards for water- Borne preservatives ".

7. AWPA A2: " Standard Methods for Analysis of Water- Borne Preservatives and Fire Retardant Formulations".

8. AWPA A7: " Wet Ashing procedures for preparing wood for Chemical Analysis."

9. AWPA A9: " Standard Method for Analysis of Treated wood and Treating Solutions by X-Ray Emission Spectroscopy".

10. AWPA A11: " Analysis of Treated wood and Treating Solutions by Atomic Absorption Spectros- copy".

11. AWPA C2: " Pressure Treatment By pressure process for lumber, Timbers, Bridge Ties and Mine Ties".

12. AWPA C16: " Preservative Treatment By pressure process for wood Used on Farms".

PUBLICATION 220-1988
RURAL ELECTRIFICATION BOARD (REB)
PEOPLES REPUBLIC OF BANGLADESH
STANDARD FOR
BARE SOID 3/4 HARD-DRAWN ALUMINUM WIRE
(GROUND WIRE)

1. SCOPE:

This standard established the physical requirements of bare solid 3/4 hard-drawn aluminum wire for use as grounding wires, jumper wires and conductors on the REB electric distribution systems.

2. MATERIAL:

The aluminum wire shall be fabricated from an alloy rod, which complies chemically, physically and electrically with the requirements of ASTM B531.

3. STRENGTH:

The tensile strength of REB aluminum wires shall be in accordance with section 6 and Table 1 of ASTM B396.

4. RESISTIVITY:

The electrical resistivity shall be determined by methods and procedures specified in ASTM B193.

5. DENSITY:

To calculate weights and cross sections, the aluminum alloy density at 20^0C (68^0F) shall be 2.705 gm/cm^3 (0.0975 lb/in^3).

6. WIRE DATA:

The allowable tolerances of wire diameters shall comply with section 10 and Table 2 of ASTM B396 and summarized as follows:

Metric Unit Equivalent

Wire Size (AWG)	Strand Diameter cm	Number of Strands	Minimum Breaking Strength range (Kgs)	Weight Kg/Km	Resistance at 20°C ohms/km
4	0.518922	1	342	57.20	1.3363224

English Unit Equivalents

Wire Size (AWG)	Strand Diameter cm	Number of Strands	Minimum Breaking Strength range (lbs)	Weight lbs/Mile	Resistance at 20°C ohms/Mile
4	0.2043	1	754	202.8	2.150544

7. JOINTS:

Unless otherwise specified when ordered, the aluminum wire shall be provided in a continuous length. Joints shall be made in accordance with sections 12.1 and 12.2 of ASTM B-396.

8. FINISH:

The wire surface shall be reasonable smooth and free from blemishes and imperfections not consistent with good commercial practice.

9. INSPECTION:

The manufacturer shall test the aluminum wire in order to certify that it meets the requirements of ASTM B396-83. REB reserves the right to witness factory tests and shall request test reports.

10. PACKAGING AND SHIPPING:

REB bare solid hard-drawn aluminum wire shall be packaged in 305 Meter (1,000 foot) coils each consisting of one length of wire. Each coil shall be protected by a heavy plastic wrapper, secured by four (4) ties of heavy cord or wire. These ties shall be secure enough so that they cannot slide on the package, but not tight enough to damage the contents of

the package. Tags attached to the end of the conductor and to the outside of the package shall contain the following information.

1. Gross and net weights in kilograms.
2. Cable size, number of strands, and type.
3. Actual length in meter.
4. Catalog number.
5. Manufacture's name and/or identification symbol.
6. Shipping data.
7. REB item number.

Permissible variation in coil length shall be plus 5 percent of the nominal shipping length.

11. OHTER STANDARDS:

The dimensional and performance requirements of REB bare solid hard-drawn aluminum wire, based on other internationally recognized standards, are acceptable only if the requirements of such standards are equivalent to or exceed the requirements quoted in this document.

12. BIBILIOGRAPHY OF REFERENCE STANDARDS: (Latest Edition)

1. ASTM B531: Standard Specification for Aluminum Alloy 5005 Drawing Stock for Electrical Purposes.
2. ASTM B-396: Standard Specification for Aluminum Alloy 5005 H19 wire for electrical purposes.
3. ASTM B193: Standard Test Method for Resistivity of Electrical Conductor Materials.

PUBLICATION 221-1988
RURAL ELECTRIFICATION BOARD (REB)
PEOPLES REPUBLIC OF BANGLADESH
STANDARD FOR
ANNEALED ALUMINUM WIRE
(TIE WIRE)

1. SCOPE:

This standard established the physical requirements of bare solid annealed aluminum wire for used as tie wires to secure conductors and hardware on REB electric distribution lines.

2. MATERIAL:

The aluminum wire shall be fabricated from an alloy rod, which complies chemically, physically and electrically with the requirements of ASTM B233.

3. STRENGTH:

The tensile strength of REB aluminum wires shall be in accordance with section 6 and Table 1 of ASTM B609.

4. RESISTIVITY:

The electrical resistivity shall be determined by methods and procedures specified in ASTM B193 and ASTM B609.

5. DENSITY:

In order to calculate weights and cross sections, the aluminum alloy density at 20^0C (68^0F) shall be 2.705 gm/cm^3 (0.0975 lb/in^3).

6. WIRE DATA:

Wire diameter and allowable tolerances shall comply with ASTM B609. REB wire sizes are summarized below:

Metric Unit Equivalent

Wire Size (AWG)	Strand Diameter cm	Number of Strands	Maximum Breaking Strength range (Kgs)	Weight Kg/Km
4	0.518922	1	167	57.20

English Unit Equivalents

Wire Size (AWG)	Strand Diameter (inch)	Number of Strands	Maximum Breaking Strength range (lbs)	Weight lbs/Mile
4	0.2043	1	369	202.8

7. JOINTS:

Unless otherwise specified when ordered, the solid annealed aluminum wire shall be provided in a continuous length. Joints shall be made in accordance with sections 63 and ASTM B-609.

8. FINISH:

The wire surface shall be reasonable smooth and free from blemishes and imperfections not consistent with good commercial practice.

9. PACKAGING AND SHIPPING:

REB bare solid hard-drawn aluminum wire shall be packaged in 305 Meter (1,000 foot) coils each consisting of one length of wire. Each coil shall be protected by a heavy plastic wrapper, secured by four (4) ties of heavy cord or wire. These ties shall be secure enough so that they cannot slide on the package, but not tight enough to damage the contents of the package. Tags attached to the end of the conductor and to the outside of the package shall contain the following information.

1. Gross and net weights in kilograms.
2. Cable size, number of strands, and type.
3. Actual length in meter.
4. Catalog number.
5. Manufacture's name and/or identification symbol.
6. Shipping data.
7. REB item number.

Permissible variation in coil length shall be plus 5 percent of the nominal shipping length.

11. INSPECTION :

The manufacturer shall conduct inspections and tests on REB aluminum wire subject to agreement with the purchaser as listed in section 10 of ASTM B609. REB reserves the right to witness factory tests and shall request test reports.

11. OHTER STANDARDS:

The dimensional and performance requirements of REB bare solid hard-drawn aluminum wire, based on other internationally recognized standards, are acceptable only if the requirements of such standards are equivalent to or exceed the requirements quoted in this document.

12. BIBILIOGRAPHY OF REFERENCE STANDARDS: (Latest Edition)

1. ASTM B233: Standard Specification for Aluminum Alloy 1350 Redraw Rod for Electrical Purposes.
2. ASTM B-609: Standard Specification for Aluminum 1350 Round Wire, Annealed and Intermediate Tempers, for electrical purposes.
3. ASTM B193: Standard Test Method for Resistivity of Electrical Conductor Materials.
4. ASTM B557: Standards Methods of Tension Testing Wrought and Cast aluminum and Magnesium Alloy Products.

PUBLICATION 222-1988
RURAL ELECTRIFICATION BOARD (REB)
PEOPLES REPUBLIC OF BANCLADESH
STANDARD FOR
ANNEALED COPPER WIRE

1. SCOPE

This standard establishes the physical requirements of bare annealed copper wire used as jumpers on REB electric distribution system.

2. MATERIAL

The copper wire shall be fabricated from an alloy rod that conforms to the requirements of ASTM B3.

3. RESISTIVITY

The electrical resistivity shall be determined by the methods and procedures specified in ASTM B193.

4. DENSITY

In order to calculate weights and cross section the density of the copper alloy shall be 8.89 gm/cm^3 (0.32117 1b/ in^3) at 20^0 C (68^0 F).

5 WIRE DATA

REB wire sizes are summarized below:

Metric Unit Equivalents

Wire Size (AWG)	Standard Diameter (cm)	Number of Strands	Maximum Breaking strength (kgs)	Weight Kg/Km	Max. Resistance at 25°C ohms/km
6	0.41148	1	346	118.4	1.404

English Unit Equivalents

Wire Size (AWG)	Standard Diameter (inch)	Number of Strands	Maximum Breaking strength (lbs)	Weight lbs/mile	Max. Resistance at 25°C ohms/100 ft
6	0.1620	1	763	419.44	0.428

6. JOINTS

Joints shall be located in accordance with the minimum separation distances in Table 1 of ASTM B8.

7. TESTS

Physical and electrical characteristics of the copper wires shall be determined before stranding.

8. INSPECTION:

The manufacturer shall conduct inspections and tests to verify that the copper wire complies with the requirements of this standard.

9. PACKAGING AND SHIPPING

REB solid annealed copper wire shall be packaged in 500 foot coils each consisting of one length of wire. Each coil shall be protected by a heavy plastic wrapper, secured by four (4) ties of heavy cord or wire. These ties shall be secure enough so that they cannot slide on the package, but not tight enough to damage the contents of the package. Tags attached to the end of the conductor and to the outside of the package shall contain the following information.

1. Gross and net weights in Kilograms.
2. Cable size, number of strands and type.
3. Actual length in meters.
4. Catalog number.
5. Manufacturer's name and/ or identification symbol.
6. Shipping data.
7. REB item number.

Permissible variation in coil length shall be plus 5 percent of the nominal shipping length.

10. OTHER STANDARDS

The dimensional and performance requirements of REB bare solid hard-drawn aluminum wire, based on other internationally recognized standards, are acceptable only if the requirements of such standards are equivalent to or exceed the requirements quoted in this document.

11. BIBLIOGRAPHY OF REFERENCE STANDARDS : (Latest Edition)

1. ASTM B3 : Standard Specification for Soft or Annealed Copper Wire.

2. ASTM B193 : Standard Test Method for Resistivity of Electrical Conductor Materials.

3. ASTM B8 : Standard Specification for concentric – Lay – Stranded Copper Conductors, Hard, Medium – Hard or Soft.

For

Lot-2: URIDS(E)-G-11-02: Conductor, Insulated

SPECIFICATION SUBMISSION AND COMPLIANCE SHEET

(To be filled by the Tenderer)

Package No: URIDS(E)-G-11
Sub-Package No: URIDS(E)-G-11-02

Item: Insulated Conductor, unit in km.

Item No.	Technical Particulars	REB specification	Guaranteed Specification
	MANUFACTURER'S NAME :	To be mentioned	
	a) Standard	ASTM B231,ASTMB232, ICEA S-66-524 (NEMA WC7)	
	b) Conductor type : D-11/D-12/D-14/D-15/D-25	Duplex: 6 and 3 AWG Quadruplex: 3, 1/0 and 6 AWG	
	c) No. of strands:		
	i) Phase Coductor(AAC)	7	
	ii) Messenger Conductor (ACSR)	6/1	
	d) Diameter of strand		
	i) Phase Conductor : D-11/D-12/D-14/D-15/D-25	1.56 / 2.20 / 2.20 /3.12/1.56 mm	
	ii) Messenger Conductor : D-11/D-12/D-14/D-15/D-25	1.68 / 2.379 / 2.379 /3.37/ 1.68 mm	
	e) D.C Resistance at 20 deg.C		
	i) Phase Coductor(AL): D-11/D-12/D-14/D-15/D-25	2.17 / 1.076 / 1.076 / 0.5372/ 2.17 ohm/km	
	ii)Messenger Conductor(ACSR): D-11/D-12/D-14/D-15/D-25	2.157 / 1.075 / 1.075 / 0.535/ 2.157 ohm/km	
D-11	f) Rated strength (Messenger): D-11/D-12/D-14/D-15/D-25	540kg / 1014kg / 1014kg / 2210 kg/ 540Kg	
	g) Insulation Material	Cross-link Polyethylene	
D-12	h) Insulation Thickness	D-11,12,14 & 25=45 Mils(1.14mm) D-15,=60 mils (1.52mm)	
	i) Carbon black for unfilled insulation	(2.5+/- 0.5)%	
D-14	j) Unaged T.S. of XLPE (min)	1.27 kg/sq.mm or 1800 lb/in.sq	
	k) Unaged E.L. of XLPE (min)	250%	
D-15	l) Aged T.S. of XLPE (min)	0.9525 kg/sq.mm/1350 lb/in.sq	
	m) Aged E.L. of XLPE (min)	187.50%	
	n) Insulation resistance(min): D-11/D-12/D-14/D-15/D-25	525 / 392 / 392 / 308/ 273 / 525 Mohm.km	
D-25	o) Set test(max)	175%	
	p) Heat distortion(max)	30%	
	q) Degree of cross-linking	(70-95)%	
	r) Lay diriction	Right-hand	
	s) Aluminum Wire lay factor	(10 to 16)xdia , Preferred -13.5	
	t) Messenger wire lay factor	(12 to 14.5)xdia , Preferred -13.5	
	u) Formation of lay	Aluminium concentric lay	
	v) Packing Length / reel : D-11/D-12/D-14/D-15/D-25	853m / 488 m / 518m / 518m/ 610m , +/- 5%	
	w) Reel Size	NRX 30 : 22 (D-11,12) NRX42.28 (D-14, D-15 & D-25)	
	x) manufacturers name	Must be engraved on the insulated cable at an interval of 1 or 2 m.	
	y)Test Report (Routine & type)	To be Furnished	
	z)Test Laboratory	Report from an Independent testing laboratory	

Note:-The bidders are required to submit all certified Test Reports as per above description. In the event of non-submission of any Test Report, the bid may be rejected.

Signature of Tenderer:
Name:
In the capacity of:

23/11/2016
(সুফল চন্দ্র দে)
সহকারী প্রকৌশলী
ডিএপিএসএস, বাপবিবো,ঢাকা।

C8\D\URIDS(E)-G-02, URIDS(E)-G-02-02(D- item, Insulated).xls

PUBLICATION 224-1988
RURAL ELECTRIFICATION BOARD (REB)
PEOPLES REPUBLIC OF BANGLADESH
STANDARD FOR
PREASSEMBLED CROSS LINKED POLYETHYLENE-INSULATED
ALUMINUM CABLE WITH ACSR MESSENGER

1. SCOPE:

This standard establishes the physical and electrical characteristics of pre-assembled cross linked polyethylene (XLPE) - insulated aluminum cables supported by a bare ACSR messenger wire. These assemblies shall be used as aerial single-phase and three-phase service drop cables in the REB overhead 50 Hz, 600-volt distribution system. The insulated aluminum conductors shall be twisted around the messenger wire, which also serves as a neutral conductor. These cable assemblies shall be used in regions that have hot and humid tropical weather with high annual rainfall.

2. GENERAL:

Pre-assembled messenger-supported cables provided to REB shall conform to the physical and electrical requirements of this standard. These assemblies shall be identified as follows:

	Components	
Assembly	Aluminum Cable	ACSR Messenger
Duplex	1	1
Quadruplex	3	1

3. MATERIAL:

3.1. Aluminum Cable

a. Description

The aluminum cable shall be formed of seven concentric lay stranded wires which meet the chemical requirements of ASTM B231. The wires shall be either:

i) Annealed, or an intermediate temper which meets the tensile and finish requirements of ASTM B609.

ii) Hard-drawn, meeting the tensile, elongation, brittleness and finish requirements of ASTM B230.

b. Physical Characteristics

The wires shall be arranged with a right-hand lay. The preferred lay shall be 13.5 times the outside diameter of the wire, but the lay shall not exceed 16 times nor be less than 10 times the wire diameter.

The wires shall have a density of 0.0975 lb/in.^{3} at 20°C.

c. **Electrical Characteristics**

The wires shall have a volume resistivity constant of 17.002 ohm. cmil/ft and a minimum volume conductivity of 61.0% IACS at 20°C.

3.2. Insulation:

a. **General**

The aluminum cable shall be provided with only unfilled cross-linked polyethylene insulation. An unfilled insulation shall contain carbon black ranging (2.5± 0.5)% for cables up to 5.0 KV. The insulation shall be free from voids, contaminants or porosity detectable with less than five times magnification.

b. **Physical and Aging Requirements**

The insulation shall meet the requirements of ICEA 538 standards
Publication no. S-66-524 (NEMA WC7)

The insulation shall exhibit the following performances:

i) Unaged Condition

Minimum tensile strength	:	**1800 lb/1n**
Minimum elongation at rupture	:	**250%**

ii) Aged condition after oven test at 121°C ± 1°C for 168 hours.

Minimum tensile strength a rupture (% of unaged value) **75%**

iii) Elongation at rupture (% of unaged value) : **75%**

iv) Heat distortion (% of unaged value)

4/0 AWG and smaller	: 30%
Larger than 4/0	: 10%

c. **Insulation Thickness**

Insulation jacket thickness of REB pre-assembled cables are listed in
Section 7 of this document.

d. **Electrical Properties**

i) Insulation Resistance

Cable insulation resistance is the resistance of the insulation to the radial flow of direct current from the conductor to the outer coverings of the cable. The test procedure shall conform to the methods outlined in section 6.15 of ICEA S-66-524, (NEMA WC7), at 60°F (15.6°C). The resistance shall not be less than the value calculated as follows:

$R = K \log_{10} D/d$

Where: R = Insulation resistance (meg-ohms per 1000 ft)

K = Insulation constant

D = Diameter over insulation

d = Diameter under insulation

e. **Performance Requirement**

The cable shall be tested to demonstrate compliance with the requirements of Section 6 of ICEA S-66-524 (NEMA WC7).

The tests shall include:

i) **Wires**

a. Dc resistance
b. Cross sectional area determination
c. Diameter determination

ii) **Insulation**

a. Tensile strength and Elongation test (Aged and unaged)
b. Set test
c. Solvent extraction test
d. Heat distortion
e. Volume resistivity
f. Ac/Dc voltage test
g. Ac/Dc spark test (during production)
h. Insulation resistance test
i. Test of Carbon Black content

3.3. **Messenger Wire**

The messenger wire shall be a bare ACSR conductor (Class AA) which shall serve as the neutral conductor. This messenger shall have six round aluminum wires wrapped around central zinc coated round steel core wire. The ACSR conductor shall conform to the physical requirements of ASTM B232 and REB Publication 225.

a. The steel core wire shall be fabricated from steel obtained by the open-hearth, electric furnace or basic oxygen process and conforms to the chemical composition specified in Section 3 of ASTM B498 as follows:

Composition:

Element	Percent (%)
Carbon	0.50 to 0.85
Manganese	0.50 to 1.10
Phosphorus, max.	0.035
Sulfur, max.	0.045
Silicon	0.10 to 0.35

The steel core wire shall be coated with zinc to Class requirements of coating weight as described in Table 4 of ASTM B498.

This wire shall be tested in accordance with Sections 5, 6 and 10 of ASTM B498.

b. The aluminum wires shall be fabricated from material that conforms to the requirements of Table 2 of ASTM B233.

The aluminum wires shall have tensile strength depending on temper, as shown in Table 1 of ASTM B230. Diameter sizes and tolerances of the aluminum rods presented in Table 3 of ASTM B230 are as follows:

DIAMETER TOLERANCES

Specified Diameters (Inclusive)		Permissible variations of mean diameter from specified diameter+
Inches	mm	
0.02600 to 1.000	6.604 to 2.540	10%
Under 0.1000 to 0.03600	Under 2.540 to 0.914	0.0010 in. (0.025 mm)
Under 0.3600 to 0.0105	Under 0.914 to 0.267	0.0005 in. (0.013 mm)

c. The lay factor of the aluminum wires shall be within range from 12 to 14.5 times the outside diameter of the ACSR conductor. The preferred lay factor is 13 times the diameter, with the lay in the right hand direction.

d. The rated strength of the conductor shall be the aggregate strength of the steel and aluminum wires determined by the methods described in Section 9.1 of ASTM 232.

e. Mechanical and electrical tests shall be conducted in accordance with Section 8 of ASTM B232.

f. In accordance with Section 10 of ASTM B232, the density of aluminum wire is assumed to be 0.0975 lb/in.^{3} at 20°C on the basis of 99.50 percent purity. The density of galvanized steel wire is assumed to be 0.281 lb/in.3 at 20°C.

The weight and electrical resistance of the stranded conductor shall be determined by methods described in Section 11 of ASTM B232.

4. ASSEMBLY:

The insulated conductors shall be twisted around the messenger with a lay of 25 to 60 times the diameter of one of the insulated conductors. The direction of lay shall be the same as that of the messenger wire. **Manufacturer's name must be engraved on the insulated cable at an interval of 1 meter or 2 meters.**

5. MESSENGER SIZING:

The messenger shall be sized in accordance with Table 7-8 of ICEA S-66-524, NEMA WC-7, summarized below over the range of conductor sizes required by REB for duplex and quadruplex assemblies.

Aluminum Insulated Power Cable Conductor Sizes (AWG)	ACSR Neutral Sizes (AWG)
6	6
4	4
3	3
1/0	1/0
4/0	4/0

6. INFORMATION REQUIRED:

The bidder shall provide the following information with the bid:

6.1 Resistance and density of the aluminum and ACSR conductors.

6.2 Insulation material type, thickness and electrical properties.

6.3 Manufacturer's catalog showing catalog number of proposed conductor assembly.

6.4 Exceptions to this REB standard should be clearly identified.

6.5 Test report on mechanical and electrical performance of aluminum cable, ACSR conductor and of insulation.

7. PACKAGING AND SHIPPING:

Conductor shall be shipped on **non-returnable** reels manufactured from "aluminum"; "steel" or export quality preservative treated "wood". All reels shall have preservative treated wood lagging. **Wood reels and all lagging** shall be constructed from new lumber which shall be square sawn, be of smooth surface, with no splits, warps, crooks, loose fibers, decay or insect infestation. The lumber used for wood reels and all lagging shall be preservative treated in accordance with "American Wood Preservers Associates Standards" and as stipulated below:

Description	Requirements/Methods	AWPA Standards
Lumber:	All softwood species	C1-82, C2-83 and C16-82
Preservatives: (any one)	Acid Copper Chromate (ACC) Ammoniacal Copper Arsenate (ACA) Chromated Copper Arsenate	P5-83, C1-82, C2-83 and C16-82 Type C CCA-C)
Treatment:	Pressure Treatment after all carpentry work.	C1-82, C2-83 and C16-82
Results of Treatment:		
Penetration:	Minimum 0.4 inches from the surface of any face.	C16-82
Assay Zone:	0-0.6 inch zone	C16-82

Retention: 0.62 pcf for ACC, 0.40 pcf for ACA and CCA. Copper shall be calculated as CuO, Chromium as CrO_3 and Arsenic as AS_2O_5 C1-82, C2-83 and C16-82

Tests:

1) Wet ash analysis for oxides A7-75, A2-85 (Section 2, 5, 6)

2) X-Ray A9-86

3) Atomic Absorption A7-75 and A11-83

A typical reel shown in Figures IA and IB shall have dimensions as follows:

Reel Dimensions In Centimeters

Reel Designation	Flange Diameter	Drum Diameter	Width Inside	Width Outside	Arbor Hole Diameter
NRX 30.22	76.2	45.8	55.8	64.8	7.62
NRX 42.28	106.7	53.3	71.1	80.0	7.62
NRX 60.28	152.4	71.1	71.1	80.0	7.62

Reel Dimensions In Inches

Reel Designation	Flange Diameter	Drum Diameter	Width Inside	Width Outside	Arbor Hole Diameter
NRX 30.22	30	18	22	25.5	3
NRX 42.28	42	21	28	31.5	3
NRX 60.28	60	28	28	31.5	3

REB pre-assembled conductor types are:

IItem No.	Conductor Assembly	AAC Phase Conductor Size (AWG)	AAC Phase Conductor Stranding	Messenger (ACSR) Stranding AWG	Messenger (ACSR) Stranding Al./Steel	Length Mtr.(Feet)	Nominal Insulation Thickness (mils)	Shipping
D-11	Duplex 6		7	6	6/1	853(2800)	45	
D-12	Duplex 3		7	3	6/1	488 (1600)	45	
D-14	Quadruplex	3	7	3	6/1	518 (1700)	45	
D-15	Quadruplex	1/0	7	1/0	6/1	335 (1100)	60	
D-20	Quadruplex	4	7	4	6/1	457 (1500)	45	
D-24	Quadruplex	4/0	7	4/0	6/1	305 (1700)	60	
D-25	Quadruplex	6	7	6	6/1	610 (1700)	45	

The top layer shall be covered by a sheet of polyethylene or similar plastic material after the pre-assembled cable is wound on the reel. Paper liners and wrappings are prohibited.

The reel shall be prepared for shipping by:

i) Nailing one inch (1") lagging strips to the flanges using two (2) eight-penny (8d) nails at each end.
ii) Binding the lagging strips circumferentially with at least four (4) galvanized steel straps (Figure IB).

Each reel shall contain one length of pre-assembled cable. REB shall permit a variation in length of plus or minus five percent (+/-5%) the nominal shipping length. Each drum should contain the same of length.

REB shall also allow an amount of conductor not exceeding ten percent (10%) of the total weight of the order to be shipped in random lengths none of which shall be shorter than fifty percent (50%) of the nominal shipping length.

Metal tags shall be attached to the outside of the reel containing the following information:

1. Gross and net weights.
2. Aluminum conductor size, number of strands, insulation type.
3. ACSR conductor size, stranding.
4. Actual length in meters.
5. Manufacturers name and/or identification symbol.
6. Shipping data.
7. REB item number.

Same information must be written on the flange of the drum by black ink.

8. TEST AND INSPECTION:

The manufacturer shall perform all the necessary tests in an independent laboratory to determine if the conductor assembly conforms to the requirements of this standard. REB reserves the right to witness factory tests and the bidder shall submit copies of all the test reports with his bid proposal. The manufacturer shall also conduct conductor reel tests and inspections and submit test reports before shipment to verify that the reels and lagging comply with the requirements of this standard.
REB shall also have the prerogative to inspect conductor reels at any time to insure compliance of this standard. **Non-conforming reels and lagging are unacceptable.**

9. OTHER STANDARDS:

The performance requirements of pre-assembled aluminum cables, based on other internationally recognized standards, are acceptable only if the requirements of such standards are equivalent to or exceed the requirements quoted in this document.

10. BIBLIOGRAPHY OF REFERENCE STANDARDS: (Latest Edition)

1. NEMA Standards publication NO./WC 7-1982 cross-link thermosetting polyethylene insulated wire and cable for the transmission and distribution of electrical energy.
2. ASTM B231: Standard Specification for Concentric-Lay-Stranded Aluminum 1350 Conductor.
3. ASTM D1603: Standard test method for carbon black content.
4. ASTM D2765: Standard test method for solvent extraction
5. Servative Treatment By Pressure Process for Wood Used on Farms.
6. ASTM B232: Standard specification for concentric- Lay-stranded Aluminum conductors coated steel Reinforced (ACSR)
7. IEC 538: Standard specification for Carbon black Content in the XLPE insulation rated up to 5KV conductor.
8. Publication-225: Standard for bare ACSR conductors (class-A)
9. ASTM B498: Standard specification for zinc-coated (Galvanized) steel core wire for aluminium conductors Steel Reinforce (ACSR)
10. AWPA C1: "Standard for preservative treatment by pressure process all timber products"
11. AWPA P5: "Standard method for water-borne preservatives"
12. AWPA A2: "Standard method for analysis of water-borne preservatives and fire retardant formulation".
13. AWPA A7: "Wet Ashing procedures for preparing wood for chemical Analysis."
14. AWPA A9: "Standard method for Analysis of treated wood and treating solutions by X-Ray Emission spectroscopy."
15. AWPA A11: "Analysis of treated wood and treating solutions by atomic Absorption spectroscopy."
16. AWPA C2: "Pressure treatment by pressure process for lumber, timbers, bridge ties and mine ties.
17. AWPA C16: "Preservative treatment by pressure process for wood used on farms.

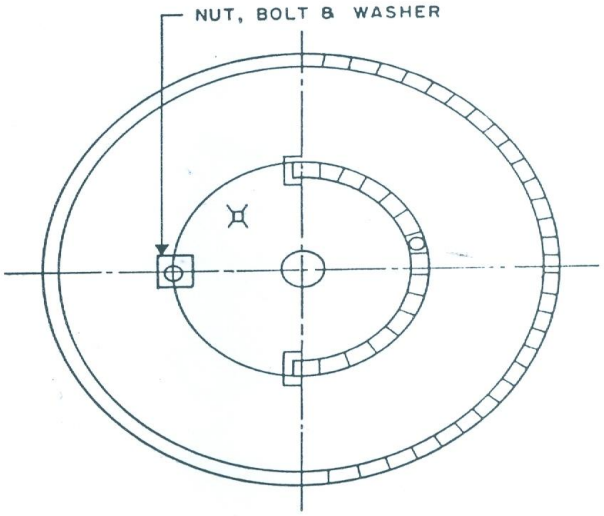

FIGURE 1A

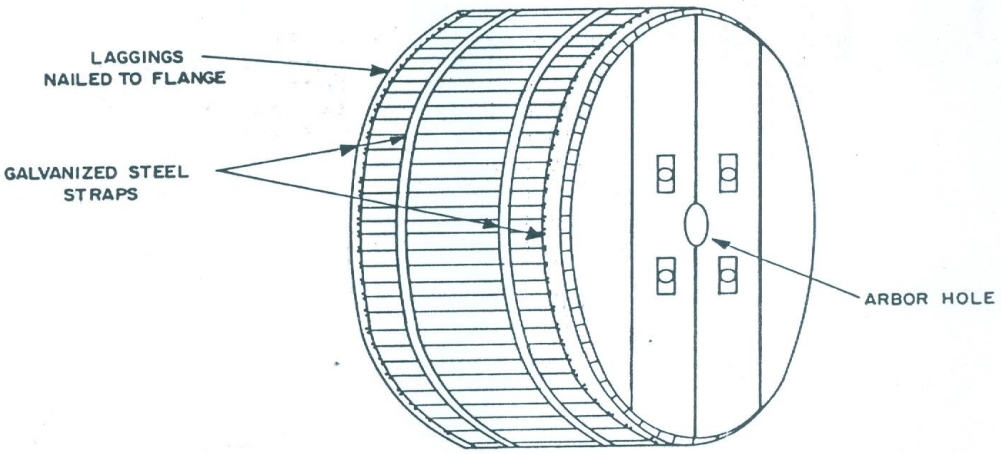

FIGURE 1B
REEL READY FOR SHIPPING

SPECIFICATION SUBMISSION AND COMPLIANCE SHEET

(To be filled by the Tenderer)

Package No: URIDS(E)-G-11
Sub-Package No: URIDS(E)-G-11-02

Item: Insulated Conductor, Unit in km.

Item No.	Technical Particulars	REB specification	Guaranteed Specification
	1. Manufacturer's name :	To be mentioned	
	2. Country of Origin	To be mentioned	
	3. Catalogue / Model No.	To be mentioned	
	4. Conductor Type	High density (HD) polyethylene covered steel-reinforced concentric-lay-stranded ACSR conductors,	
	5. No. of Strands	7 (Seven) This conductor is made of six (6) round aluminum-wires wrapped around a central zinc-coated round steel-wire core with black HD polyethylene covering.	
	6. Construction	The number and diameter of aluminum and steel wires and the stranding shall conform to the requirements of ASTM B232.	
	7. Material Density	In accordance with Section 10 of ASTM B232, the density of aluminum wire is assumed to be 2.705 gm/cm3 (0.0975 lb/in. 3) at 20°C on the basis of 99.45 percent purity. The density of galvanized steel wire is assumed to be 7.78 gm/cm3 (0.281lb/in.3) at	
D-59	8. Size (AWG), (D-59/ D-61/ D-62)	# 2/ 1/0/ 4/0	
D-61	9. Voltage Level	15 KV	
D-62	10. Steel wire	Composition as per ASTM B498 and coated with zinc to class A,	
	11. Diameter of Steel Wire	0.2672/ 0.3370/ 0.4770	
	12. Composition of Steel Wire	As described in specification conforming ASTM B498	
	13. Aluminium Wire	Shall conform to the chemical requirement of ASTM B230	
	14. Diameter of Aluminium Wire	0.2672/ 0.3370/ 0.4770	
	15. Resistivity of Aluminium wire	The electrical resistively limits and values of the aluminum rods as per ASTM B230.	
	16. Insulation Material	High density polyethylene (Black)	
	17. Insulation Thickness	150 Mils(3.81mm)	
	18. Overall Diameter (D-59/ D-61/ D-62)	15.65/ 17.73/ 21.92 mm	
	19. Ultimate Strength (D-59/ D-61/ D-62)	1,228/ 1,887/ 3598 Kg	
	20. Lay diriction	Right-hand	
	21. Lay Factor	The lay factor of the aluminum wire shall be not less than 12 nor more than 14.5 times the outside diameter of the conductor. The preferred lay factor is 13 times the diameter, with the lay in a right hand direction.	

C8\D\URIDS(E)-G-02-02, (D-59,61,62).xls

Item No.	Technical Particulars	REB specification	Guaranteed Specification
	22. Nominal Length (D-59/ D-61/ D-62)	1970/ 1858/ 927 Mtr.	
	23. Top Covering	The top layer shall be covered by a sheet of polyethylene or similar plastic material after the Insulated Tree wire conductor is wound on the reel. Paper liners and wrappings are prohibited.	
	24. Reel Size (D-59/ D-61/ D-62)	NRX 48 :28/ NRX 50 : 42/ NRX 48 : 28	
D-59	25. Type of reel	Reel from steel or export qauality preservative treated wood	
D-61	26. Manufacturers name	Must be engraved on the insulated cable at an interval of 1 or 2 m.	
D-62	27. Test Report	Shall submit all the routine & type test reports of offered items The steel wire shall be tested in accordance with Sections 5, 6 and 10 of ASTM B498. The manufacturer shall conduct conductor tests and inspections in accordance with Section 16 of ASTM B23	
	28. Test Laboratory	Report from an Internationally recognized independent Testing Laboratory	

Note:-The bidders are required to submit all certified Test Reports as per above description. In the event of non-submission of any Test Report, the bid may be rejected.

Signature of Tenderer:
Name:
In the capacity of:

23/11/2016
(সুফল চন্দ্র দে)
সহকারী প্রকৌশলী
এমপিএসএস বাগেরহাট

C8\D\URIDS(E)-G-02-02, (D-59,61,62).xls

PUBLICATION 228-1994
RURAL ELECTRIFICATION BOARD (REB)
PEOPLES REPUBLIC OF BANGLADESH
STANDARD FOR
15 KV INSULATED TREE WIRE

1. **SCOPE :**
This standard establishes the dimensional and performance requirements of high density (HD) polyethylene covered steel-reinforced concentric-lay-stranded aluminum conductors (ACSR), to be used as 15 KV Insulated Tree wire on REB distribution lines. This conductor is made of six (6) round aluminum-wires wrapped around a central zinc-coated round steel-wire core with black HD polyethylene covering.

2. **GENERAL :**
Insulated tree wire conductors furnished to REB specifications shall conform in all respects to the dimensional and performance requirements of this standard, which covers :
(a) Steel core wire.
(b) Aluminum wire.
(c) Insulation.

The ACSR conductors shall be classified as Class A as designated in ASTM B232.

3. **STEEL CORE:**

The steel core shall consist of wires which meet the following requirements :

(a) **Material**

The steel wire shall be fabricated from steel obtained by the open-hearth, electric furnace, or basic oxygen process and conforms to the chemical composition specified in Section 3 of ASTM B498 as follows :

Element	Composition percent (%)
Carbon	0.50 to 0.85
Manganese	0.50 to 1.10
Phosphorus, max	0.035
Sulphur, max	0.045
Silicon	0.10 to 0.35

(b) Testing

The steel wire shall be tested in accordance with Sections 5, 6 and 10 of ASTM B498.

4. **Corrosion Protection** :
The steel wire shall be coated with zinc to Class A requirements with coating weight described in Table 4 of ASTM B498.

5. **ALUMINUM AND STEEL WIRES** :
(a) Materials

The round aluminum wire shall be drawn from rods that conform to the chemical requirements of Table 2, ASTM B230.

(b) Testing
The aluminum rods shall have tensile strengths depending on temper as shown in Table 1 of ASTM B233.

(c) Resistively
The electrical resistively limits and values of the aluminum rods are presented in Table 4 of ASTM B230.

(d) General
Aluminum wires used shall meet the requirements of ASTM B230.

(e) Lay Factor
The lay factor of the aluminum wire shall be not less than 12 nor more than 14.5 times the outside diameter of the conductor. The preferred lay factor is 13 times the diameter, with the lay in a right hand direction.

(f) Construction :

The number and diameter of aluminum and steel wires and the stranding shall conform to the requirements of Tables 1, 2 and 3 of ASTM B232.

(g) **Conductor Strength** :

The rated conductor strength shall be the aggregate strength of the steel and aluminum wires determined by the methods described in Section 9.1 of ASTM B232.

(h) **Material Density** :

In accordance with Section 10 of ASTM B232, the density of aluminum wire is assumed to be 2.705 gm/cm^3 (0.0975 Ib/in. ^{3}) at 20°C on the basis of 99.45 percent purity. The density of galvanized steel wire is assumed to be 7.78 gm/cm^3 (0.281Ib/in.3) at 20°C.

(i) **Weight and Electrical Resistance** :

The weight and electrical resistance of the stranded conductor shall be determined by the methods described in Section 11 of ASTM B232.

(j) **Variation in Area** :

Limits of variation of the cross section of the aluminum wires shall be as described in Section 12 of ASTMN B232.

6. **CONDUCTOR COVERING** :
The high density (HD) polyethylene covering shall have a minimum thickness of 150 mils.

7. **CHARACTERISTICS** :
REB Insulated Tree wire conductors shall have the following Characteristics:

English Unit Equivalents

REB Item	D-59	D-61	D-62
Size (AWG)	# 2	1/0	4/0
Strands, (no.. x size. inches)	6 x 0.1052	6 x 0.1327	6 x 0.1878
Steel	1 x 0.1052	1 x 0.1327	1 x 0.1878
Covering Thickness (mils)	150	150	150
Overall Diameter (mils)	616	698	863
Ultimate Strength (pounds)	2.708	4.161	7,933

Metric Unit Equivalents

REB Item	D-59	D-61	D-62
Size (AWG)	# 2	1/0	4/0
Strands, (no. x size, Centimeters)			
Aluminum	6 x 0.267208	6 x 0.337058	6 x 0.477012
Steel	1 x 0.267208	1 x 0.337058	1 x 0.477012
Covering Thickness (mm)	3.81	3.81	3.81
Overall Diameter (mm)	15.65	17.73	21.92
Ultimate Strength (kgs)	1.228	1.887	3,598

8. FINISH :

The conductor shall be free of imperfections, sharp protrusions and blemishes not consistent with good commercial practice.

9. TESTS & INSPECTION :

The manufacturer shall conduct conductor tests and inspections in accordance with Section 16 of ASTM B232. REB reserves the right to witness factory tests and inspections and will request test reports. The manufacturer shall also conduct conductor reel tests and inspections and submit test reports before shipment to verify that the reels and lagging comply with the requirements of this standard. REB shall also have the prerogative to inspect conductor reels at any time to insure compliance of this standard. **Non-conforming reels and lagging are unacceptable.**

10. PACKAGING & SHIPPING :

Conductor shall be shipped on **non-returnable** reels manufactured from " steel" or export quality preservative treated "wood". All reels shall have preservative treated wood lagging. **Wood reels and all lagging** shall be constructed from new lumber which shall be square sawn, be of smooth surface, with no splits, warps, crooks, loose fibers, decay or insect infestation. The lumber used for wood reels and all lagging shall be preservative treated in accordance with " American wood Preservers Associates Standards" and as stipulated below:

Description	Requirements / Methods	AWPA Standards
Lumber :	All softwood species	C1-82, C-2-83 and C16-82
Preservatives : (any one)	Acid Copper Chromate (ACC) Ammoniacal Copper Arsenate (ACA) Chromated Copper Arsenate type C (CCA-C)	P5-83, C1-82, C2-83 and C16-82
Treatment :	Pressure treatment after all carpentry works	C1-82, C2-83 and C16-82
Results of Treatment :		
Penetration :	Minimum 0.4 inches from the surface of any face	C16-82
Assay Zone :	0-0.6 inch zone	C16-82
Retention :	0.62 pcf for ACC, 0.40 pcf for ACA and CCA. Copper shall be calculated as Cu0, Chromium as $Cr0_3$ and Arsenic as AS_20_5	C1-82, C2-83 and C16-82
Tests :	1) Wet ash analysis for oxides 2) X-Ray 3) Atomic Absorption	A7-75, A2-85 section 2, 5, 6 A9-86 A7-75 and A11-83

A typical wooden/steel reel and lagging are shown in Figures 1 and 2 and shall have the following dimensions :

Reel Dimensions In Centimeters

Reel Designation	Flange Diameter	Drum Diameter	Width		Arbor Hole Diameter
			Inside	Outside	
NRX 48.28	122	61	71	84	7.62
NRX 50.42	127	61	81	94	7.62

Reel Dimensions in Inches

Real Designation	Flange Diameter	Drum Diameter	Width		Arbor Hole Diameter
			Inside	Outside	
NRX 48.28	48	24	28	33	3
NRX 50.42	50	24	32	37	3

The nominal length and weight of REB conductors shipped on NRX reels is as follows :

Conductor Length and weights (Metric Units)

REB Item No.	Reel Size (Cm)	Weight (kg/km)	Nominal Length (Mtr)	Weight of Nominal Length (kg)
D-59	122	274	1,970	540
D-61	127	370	1,858	689
D-62	122	634	927	588

Conductor Length and weights (English Units)

REB Item No.	Reel Size (Inch)	Weight (Ib/Mile)	Nominal Length (ft)	Weight of Nominal Length (Ib)
D-59	48	965	6,463	1,191
D-61	50	1,334	6,095	1,519
D-62	48	2,276	3,040	1,297

The top layer shall be covered by a sheet of polyethylene or similar plastic material after the Insulated Tree wire conductor is wound on the reel. Paper liners and wrappings are prohibited.

The wooden reel shall be prepared for shipping by :

1. Nailing 1" (2.54 cm) thick lagging strips to the flanges using two (2) eight-penny (8d) nails at each end.
2. Binding the lagging strips circumferentially with at least four (4) galvanized 1/2" X 1/16" (1.27 x 0.15875 cm) steel straps as illustrated in figure 1.

Non-returnable steel reels shall also have 1" (2.54 cm) thick lagging strips securely attached to the flanges and bound circumferentially with two (2) galvanized 1/2" x 1/16" (1.27 x 0.15875 cm) steel straps as illustrated in figure 2 to protect the conductor during shipment and handling.

Each reel shall contain one length of conductor. REB shall permit a variation in length of plus or minus five percent (+/-5%) of the nominal shipping length.

REB shall also allow an amount of conductor not exceeding ten percent (10%) of the total weight of the order to be shipped in random lengths none of which shall be shorter than fifty percent (50%) of the nominal shipping length.

Metal tags shall be attached to the inside and outside of the reel containing the following information :

1. Gross and net weights.
2. Conductor size, stranding.
3. Actual length in meters.
4. Catalog number.
5. Manufacturers name and /or identification symbol.
6. Shipping data.
7. REB item number.

11. **OTHER STANDARDS** :
The performance requirements of Insulated Tree wire cables based on other internationally recognized standards, are acceptable only if the requirements of such standards are equivalent to or exceed the requirements quoted in this document.

12. **BIBLIOGRAPHY OF REFERENCE STANDARDS** : (Latest Edition)
1. ASTM B230: "Standard Specification for Aluminum 1350-H19 wire for Electrical Purposes".

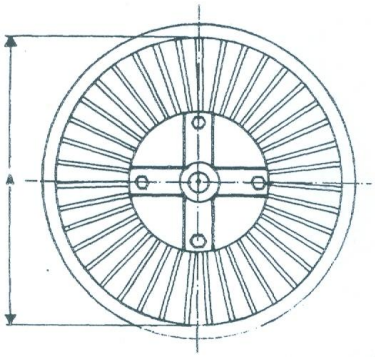

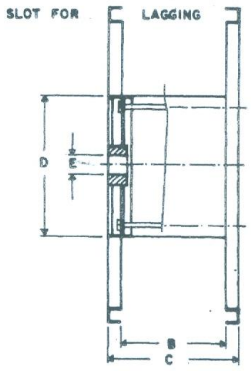

STEEL
FIGURE - 1

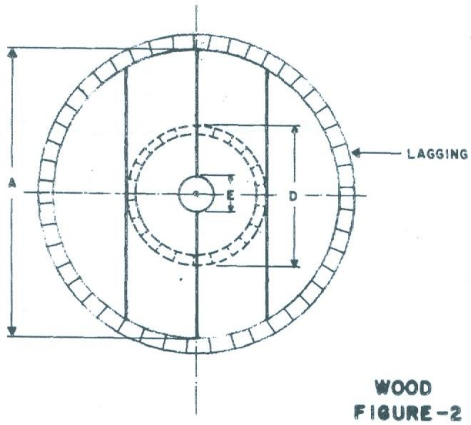

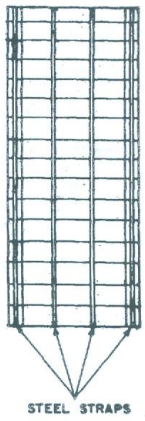

WOOD
FIGURE - 2

LEGEND:

A - FLANGE
B - INSIDE
C - OUTSIDE
D - DRUM
E - ARBOR HOLE

4. Drawings

The drawings for each item of Conductor described in Lot No-1 & Lot No-2 shown in technical specifications described in serials 3 of Section 6 respectively.

5. Inspection/Tests:

Inspection and tests shall be:
Goods: Described in Lot-01, Lot-02 & Lot-03.
Type of test, Time or milestone, Place & Procedure: as per specification and as follows:

5.1 Pre-shipment/Pre-delivery Inspection	(a) **PSI Conducted by:** Pre-shipment Inspection will be carried out by the purchaser's nominated Inspection Team of 3 members and/or purchaser's appointed PSI agent. (b) Time and Place of Inspection: At least three weeks before the shipment of goods. Tests will be conducted in presence of the Purchaser's nominated inspection team/agent at the manufacturer's laboratory or any other recognized facility as accepted by the Purchaser. (c) **Process of Test:** Inspection Team and/or PSI agent will randomly collect 1% (one percent) reel/drum of samples of each stack of each item for inspection from the production line as well as from manufactured quantity and 3m conductor will be collected from the sample drum for testing. Each sample will be identified and signed by the Inspection Team or PSI agent. The Inspection Team or PSI agent shall witness the tests and will also conduct visual inspection of the physical conditions, quantity and packaging of the goods before shipment and delivery in accordance with GCC clause 26.2 Pre-shipment tests will be carried out as indicated in Section-6 Technical Specifications. (d) Cost: All costs related to inspection & testing during pre-shipment inspection shall be borne by the supplier. However, costing related to travel, accommodation and subsidence of the purchaser's nominated inspectors/agent shall be borne by the purchaser. PSI agent fee (if applicable) will also be borne by the purchaser. If goods are not ready for inspection on due date and time as noticed by the supplier, the additional PSI agent fee (if incurred) will be realized from the

	supplier. (e) **Notice**: The supplier shall give a reasonable advance notice, including the place and time thereof to the Purchaser by e-mail/fax at least 45 (forty five) days in advance of the inspection. **(f) Shipment Clearance:** Purchaser will issue a shipment clearance to the supplier upon receipt of satisfactory PSI report within one week from the date of inspection.The supplier shall not ship the materials before obtaining shipment clearance from the BREB.
5.2 Post Landing/ Delivery Inspection	(a) The supplier shall inform the Purchaser immediately after arrival of the goods at Final destination. An inspection team nominated by the Purchaser shall perform the post landing inspection in presence of Supplier's representative (if they desire so). (b) The Inspection Team will visually inspect the physical conditions (identification mark, manufacturer's symbol and year, dimension, pin-hole gauge, damage, deformity, finishing, etc.), quantity and packaging of the goods delivered. In case of insulators, delivered materials will be accepted after testing (tests are mentioned below) at BREB facilities and facilities within Bangladesh decided by Purchaser in presence of Supplier's representative (if they desire so).

6. PACKING, MARKING AND DRAWINGS INSTRUCTIONS FOR BOX DESIGN NO. 1

PACKING, MARKING AND DRAWINGS INSTRUCTIONS FOR BOX DESIGN NO. 1, 2,3 & CONDUCTOR DRUM:

Approved by Technical Specification Committee (TSC) as on 05/09/2013 and
BREB Board Decision No: 13848 (Board Session 525, Date: 20-01-2015)

1.0 Packing Requirements:

All material and equipment shall be packed for export shipment to a tropical climate in wooden shipping boxes that are sufficiently durable to withstand numerous handing. The shipping boxes shall be strong enough to prevent loss from pilferage or damage sustained from stacking, shipping or handling. Workmanship in the manufacture of the wooden shipping boxes shall be of the highest standard and the material used shall be in accordance with the best commercial practices. It shall be the Supplier's responsibility to provide packing acceptable to the insurance underwriters.

Sawn board lumber or plywood shall be used for the sheathing of the shipping boxes. All lumber used shall be new, well seasoned, sound, and free of splits, decay or an excessive number of knots. Plywood used shall be new, free of splits and decay and shall be exterior grade quality. Each shipping box shall contain only commodities of like items. These commodities shall be primary packaged in units of numerical quantities consistent with the manufacturer's normal packaging practices. However, the maximum numerical quantities of each item per package shall not exceed the limit as stated in the Technical Specifications for that particular item. The minimum protection to be afforded to commodities subject to damage from the elements or those items, which are packaged in cardboard cartons, is that a heavy plastic liner shall completely envelope the entire contents contained within the shipping box. Equipment shall be firmly bolted or strapped to the shipping box floor or otherwise braced, blocked or secured to the box to insure the security of the equipment during transit and handing. Special packing requirements that are stated in the Technical Specifications and the Material and Price Schedule must be strictly observed.

Post-landing inspection of wooden packing of supplied materials will be according to BREB Board Decision No.13848.

2.0 Shipping Box & Conductor Wooden reel Specifications:

There are three (3) different shipping box designs (No.1, 2 & 3) and conductor wooden reel designs that are to be used for packing of equipment, material and conductor of shipment. The shipping box and wooden reel to be manufactured by the supplier will be dependent upon what material or equipment or type of conductor the supplier shall be shipping . The supplier must conform to the requirements as set forth in the following written specifications and the conceptual design as pictorially represented in this document.

Deviation, if any, from the BREB specifications in all wooden packing including wooden reel of supplied materials, shall be recovered through imposing penalty at the rate(s) given below as per BREB Board Decision No.13848 (Board Session 525,Date;20-01-2015) and it will be the Part of Bid-document (enclosed 07 Pages).

(a) If paper cartoon box is used in packing or used no box or sapwood is used in place of heartwood or untreated wood is used in place of applicable treated wood, Tk. 780 (Seven hundred and eighty) shall be penalized against per cubic foot of wood, which is changeable time to time through a committee.

(b) If there is deviation in a box/drum from standard volume (deviation in measurement for each component from designed based component) Tk. 780 (Seven hundred and eighty) shall be penalized against per cubic foot of wood, which is changeable time to time through a committee.

(c) If there is any deviation in gunny bag (Item-B, Line Hardware) for local bidder, Tk. 200 (Two hundred) shall be penalized for each gunny bag, which is changeable time to time through a committee.

(d) If there is any deviation in penetration and retention in treated wooden box/cable drum, Tk. 505 (Five hundred and five) shall be penalized against per cubic foot of wood, which is changeable time to time through a committee.

(e) If there is any deviation in penetration and retention in specified preservative treated wooden box/cable drum, the following penalization formula shall be applied.

P= [KCD {(SMP-OAP)+(SMR-OAR)}]+10% Overhead Charge.

Where, 'P' is the penalize-able amount, 'K' = 0.75 Constant factor, 'C' is the volume of supplied box/drum, 'D' is the cost of each drum/box, 'SMP' is the specified minimum Penetration, 'OAP' is the obtained average penetration, 'SMR' is the specified minimum Retention, 'OAR' is the obtained average Retention

(f) If steel / PVC bands and nut-bolts are not used in packing/drum Tk. 100 (One hundred) shall be penalized for each kilogram of steel bands and nut-bolts, which is changeable time to time through a committee. PVC bands shall be used in Shipping Box Design Number 1, 2 and 3.

(g) 10% on total penalty amount as overhead charge shall be added with total penalty amount to calculate the grand total penalty amount for Packing deviation.

(h) In post landing inspection, tolerance of up to 10% on the deviation of measured components of wooden packing box/ wooden reel and up to 10% on the deviation of preservative chemical retention shall be acceptable.

(i) For the supplied packing in a sub-package total penalty under that sub-package on packing deviation shall be imposed by the basis of inspection of 10% shipping wooden Box's / wooden Conductor drum / Gunny bag during Post landing Inspection.

Inspection Procedure :

(a) Post landing inspection for the packing box of the materials procured by the PBS under local tender:

i) For the packing box/cable drum of the materials of local manufacturer inspection sample shall be at random 10%or 10 pieces whichever is greater (designed based) and the inspection shall be conducted at the plant site of the manufacturer .

ii) For the packing box / cable drum / gunny bag of the supplied materials of Lead PBS or for maximum number of materials receiving PBS , inspection sample shall be at random 10%or 10 pieces whichever is greater (designed based) and the inspection shall be conducted at receiving store and at one or two PBS stores where applicable.

iii) For the packing box/cable drum of the materials of local tender of local producer, inspection sample shall be at random 10%or 10 pieces whichever is greater (designed based) and the inspection shall be conducted at lead PBS or maximum receiving PBS store and at one or two PBS stores where applicable.

(b) Post landing inspection for the packing box/cable drum/gunny bag of the materials procured by the BREB under local and international tenders from local and international manufacturer :
For the packing box/cable drum/gunny bag of the materials of local and international tenders of local manufacturer and international manufacturer, inspection sample shall be at random 10%or 10 pieces whichever is greater (designed based) and the inspection shall be conducted at BREB Warehouse as per delivery schedule of material supplied .

(c) Preservative treated insulator box / cable drum for the materials of the BREB/PBS shall be inspected 100% at wood treatment plant which are capable to chemical treatment of wood as per BREB/PBS specification for the wooden box/cable drum required for packing of BREB/PBS materials.

Note:- In any confusion will arise about penalty for packing deviation (Stated in clause-2,BREB Board decision No.13484),then original Bangla version of that BREB Board Decision No.13484 will be prevailed.

2.1 Shipping Box Design Number 1:

This shipping box design shall be used for the packaging and shipping of the following commodities:

a. Line Hardware ("B" Items),
b. Conductor to be Shipped in Coils ("F" Items),
c. Conductor Accessories ("E" Items),
d. Underground/Submarine Power Cable Accessories ("F" /"DS" Items,
e. Sectionalizing Devices (except Group Operated Air Break Switches and Reclosers), ("H" Items),
f. Connectors ("I" items),
g. Meters and Metering Accessories ("J" Items),
h. Capacitors and Accessories ("K" Items),
i. Street Lights and Accessories ("L" Items),
j. Miscellaneous ("M" Items),
k. Test Instruments ("TI" Items),
l. Line Tools ("TL" Items).

This box design will not be applicable for the items B-42,B-43, B-62, B-63, B-65, B-87, B-88, B-90, BS-41 & BS-41.1. These items will be delivered in bare bundle. The box sheathing shall be fabricated from exterior grade plywood with a minimum thickness of three-eighth of an inch (3/8"), or sawn board lumbers. The maximum width of the sawn boards shall be six inches (6"). The minimum thickness of the sawn boards utilized for the sides and roof of the box shall be five-eight of an inch (5/8"), whereas the floorboards shall have a minimum thickness of one inch

(1"). The minimum dimensions of the skid runner and header shall be three inches (3") by four inches (4"). The skid runners shall be hardwood. The minimum dimensions of the frames and cross-braces shall be one inch (1") by four inches (4"). One-half inch (1/2") bolts shall be used to secure the header to the skid runner.

The box shall be strapped with four (4) flat Steel / PVC strapping bands whose minimum width shall be three-fourth of an inch (3/4") and secured with crimped steel banding clips. Two (2) Steel / PVC bands shall be installed vertically and two (2) Steel / PVC bands shall be installed horizontally (lengthwise). {PVC Bands Specification, Width (W)= 15mm (+/- 0.5mm) and minimum thickness= 01mm}. The nominal dimensions of Shipping Box Design Number 1 shall be three-fourth (3/4) of a meter in height, three-fourth (3/4) of a meter in width and one meter in length (Height=0.75M, Width=0.75M, Length=1.0M). Note that these are nominal dimensions and that the Supplier may slightly vary these dimensions to better accommodate the packaged commodities.

In addition to, only for local bidder, in case of line hardware (B items) supply of Wooden Box (Wooden Box Design No 1) can be omitted. Instead of Wooden Box, they can supply line hardware packaged by Gunny bag/Jute bag. Gunny bag/ Jute bag must be double layer, unused and durable. Each package shall be clearly marked with the manufacturer's name, REB item number & Quantity.

2.2 Shipping Box Design Number 2:

This shipping box design shall be used for the packaging and shipping of the following commodities:

a. Transformers ("G" Items),
b. Automatic Circuit Reclosers ("H" Items),
c. Group Operated Air Break Switches ("H" Items),
d. Automatic Voltage Regulators ("K" Items),
e. Static Converters ("M" Items).

The material and fabrication requirements for Shipping Box Design Number 2 shall be the same as the material and fabrication requirements of Shipping Box Design Number 1 except for the following differences: (i) cross-bracing is not required; (ii) only three (3) steel / PVC bands are required, two (2) bands installed vertically and one (1) band installed horizontally (lengthwise); and (iii) there are no nominal dimensions. {PVC Bands Specification, Width (W)= 15mm (+/- 0.5mm) and minimum thickness= 01mm}. The size of the shipping boxes will be determined by the maximum number of pieces of equipment allowable per box. The maximum number of pieces of equipment allowable per box is as follows:

a. Transformers, 15 kVA and below ---2 per box,
b. Transformers 25 kVA and above ---1 per box,
c. Automatic Circuit Reclosers, single phase ---2 per box,
d. Automatic Circuit Reclosers, three phase ---1 per box,
e. Group Operated Air Break Switches ---1 per box,
f. Automatic Voltage Regulators ---1 per box,
g. Static Converters ---1 per box.

2.3 Shipping Box Design Number 3:

This shipping box design shall be used for the packaging and shipping of insulators ("C" items). The box shall be fabricated from chemically treated sawn board lumber with minimum sizes as given in table in table-1. All frames shall be installed only on the outside of the box. Wooden separators shall be used to individually partition both horizontally and vertically, each insulator. The box shall be strapped with 2 (two) flat Steel / PVC strapping bands, vertically installed. The minimum width of these bands shall be one-half inch (1/2"), items wise number of insulator per box is shown on the table-1. {PVC bands specification, Width (W)=15mm (+/- 0.5mm) and minimum thickness=01mm}

3.0 Export Marking:

All packages shall be identified with the Export Marking Instruction as set forth in the Delivery Schedule. In addition, the contents of the box, the net and gross weights and the Contract identification number shall be externally marked. All external package markings shall be legibly stenciled or painted with a quality marking substance that is both waterproof and durable. Chalk or crayon shall not be used. Packages must be numbered consecutively and no two packages delivered by the Supplier to each port of entry shall carry the same number regardless of the number of shipments. All steel banding clips used to secure the steel banding shall be legibly and indelibly marked with the manufacturer's name or symbol. Refer to Detail of, Banding Clip Manufacturer's identification as depicted on the Shipping Box Design pictorial representation.

The words REB BANGLADESH (GOB Fund) must be legibly written in English, using red capital letters at least four centimeters (4cm) in height, placed diagonally on four (4) sides of all packages. In addition, all boxes shall be marked with one (1) black and one (1) orange strip depicted as "A" and "B" respectively on the painted corner detail identification of the Shipping Box Design pictorial representation.

AMENDMENT AND ADDENDUM TO:

REB STANDARDS FOR WOODEN CONDUCTOR REELS, INSULATOR & TRANSFORMER PACKINGS, ALL RESPECTIVE PUBLICATIONS- 1988

(3 PAGES AFTER AMENDMENT)

ALL RESPECTIVE SECTIONS REGARDING PACKAGING & SHIPING OF CONDUCTOR REELS, INSULATOR & TRANSFORMER WHERE WOODEN PACKINGS ARE APPLICABLE SHALL BE AMMENDED AND ADDED AS FOLLOWS:

ADD IN STANDARDS FOR INSULATORS & TRANSFORMERS: The following table shall be added as a second paragraph under respective sections of packaging and shipping.

REPLACE FROM STANDARDS FOR CONDUCTOR REELS: The existing table in second paragraph regarding preservative treatment shall be replaced by the following new table:

Description	Requirements / Methods		Standards
Lumber/ Timber Species	The following softwoods and hardwoods shall be permitted regardless of countries of origin:		AWPA C1-82, C2-83 & C16-82 & IRG DOC : IRG / WP 96-40071
	Species	Treatment Group	
1	2	3	4

Softwoods (strength group A: green fibre stress 50 N/mm^2 and above):

1.	Southern pines (***Pinus elliottii,P.taeda, P.echinata, P. Palustris).***	A
2.	Douglas fir (incised) (***Pseudotsuga menziesii***).	A
3.	European red pine (***Pinus sylvestris).***	A
4.	Caribbean pine (***Pinus caribaea*).**	A
5.	Chir pine (***Pinus roxburghii*).**	A
6.	Larches (***Larix* spp.**)	A

Softwoods (strength group B: green fibre stress below 50 N/mm^2 and above 40 N/mm^2):

1.	Pines other than listed under strength group A (***Pinus* spp.).**	A
2.	Firs, Partals (***Abies* spp).**	A
3.	Spruces (***Picea* spp.).**	A
4.	Deodar (***Cedrus deodara***).	A
5.	Cedars (***Thuja* spp).**	A
6.	Hemlock (***Tsuga heterophylla*).**	A

Hardwoods (strength group A: green fibre stress 50 N/mm^2 and above):

1.	Garjan, Keruing (***Dipterocarpus* spp.).**	B
2.	Mango, Amm (***Mangifera indica***).	B
3.	Uriam (***Mangifera sylvatica*).**	B
4.	Koroi, Sirish (***Albizia procera, A. lebbeck, A. lucida, A. richardiana, A. odoratissima***).	A^2

5.	Batnas, Oaks (***Quercus* spp.**).	**A**
6.	Birches (***Betula* spp.**).	**B**
7.	Maples (***Acer* spp.**).	**B**
8.	Eucalyptus (***Eucalyptus* spp.**).	**A**
9.	Jams (***Syzygium* spp.**).	**B**[2]
10.	Baens (***Avecinnia* spp.**).	**B**
11.	Civit (***Swintonia floribunda***)	**A**
12.	Minjiri (***Cassia siamea***).	**A**
13.	Sissoo (***Dalbergia sissoo***).	**A**
14.	Babul, Kikar (***Acacia arabica***).	**A**
15.	Devdaru (***Polyalthia longifolia***).	**B**

Hardwoods(Strength group B: green fibre stress below 50 N/mm^2 and above 40 N/mm^2):

1.	Rubberwood (***Hevea brasiliensis***).	**B**
2.	Bats, Pakurs (***Ficus* spp.**).	**B**
3.	Raintree (***Samania saman***).	**A**
4.	Keoras (***Sonneratia* spp.**).	**B**
5.	Korois other than listed under strength group A (***Albizia* spp.**).	**A**
6.	Kadam (***Anthocephalus cadamba***).	**B**

Notes: Treatment Group **A**= Timber Species with durable and impermeable heartwood.
Treatment Group **B**= Timber Species with permeable/treatable heartwood.
1. Except *A. richardiana* which falls under treatment group **B**.
2. Only kalojam (*S. gambolana*), others fall under treatment group **B**.

Manufacturing:	A single packing unit including laggings shall either be constructed with timber of strength group A having specified nominal size and thickness of lumber or constructed with lumber of strength group B having thickness of lumber at least 1.5 times higher than specified nominal.	
Preservatives: (any one)	Either salt or oxide formulated Acid Copper Chromate (ACC)/Chromated Copper Boron (CCB). Bidder shall furnish any of these preservatives, trade names of preservative shall not be acceptable.	**AWPA P5-83, C1-82,C2-83, and C16-82. & IRG DOC: IRG/WP 96-40071.**
Preservative Treatment:	Full cell pressure treatment after all carpentry works. One treatment charge shall include one species and one commodity, seasoned at same moisture content (not more than 20% MC for all hardwoods and not more than 25% MC for all softwoods at centerline of a piece). Impregnation pressure shall not be less than 10 kg/cm^2 and initial vacuum shall not be less than 559 mm of Hg.	**AWPA C1-82, C2-83, C16-82. & IRG DOC: IRG /WP 96-40071.**
Results of Treatment:		
Penetration of Preservative :	For the timber species under treatment group A, only complete (100%) sapwood shall be penetrated with preservative. For the timber species under treatment group B, complete (100%) sapwood and at least 10mm (including sapwood and hardwood) from the surface of any face, shall be penetrated with preservative. The penetration of preservative shall be governed by the presence of Copper component in borings. Only complete (100%) heartwood shall be penetrated with boron where heartwood is non durable.	**AWPA C16-82. & IRG DOC: IRG\WP 96-40071.**

Assay zone :	Assay shall include borings, which penetrated up to zones specified for assay. Borings taken from the center of wide surface of a piece shall only be assayed. For all species of timber, the assay zone shall be 0 mm to 15 mm (0 to 0.62 inch).	**AWPA C16-82 & IRG DOC: IRG/WP 96-40071.**
Preservative Retention:	Copper shall be calculated as Cu0 and Chromium as CrO_3.The minimum retention shall be w/w **1.56%** dry oxides (1.56 kg dry oxides in 98.44 kg of oven dry wood) for **CCB** and **ACC** in specified assay zone within the following limits:	**AWPA C1-82, C2-83 & C16-82. & IRG DOC: IRG/WP 96-40071.**

Preservative	**Specified retention (w/w%).**	**Minimum retention of individual components (w/w%)**			**Minimum sum of individual components assayed (w/w%)**
		$Cr0_3$	**CuO**	**H_3BO_3**	
CCB/ACC	**1.56**	**0.85**	**0.40**	**0.31**	**1.56**

A tolerance of -10% from the specified minimum retention is acceptable during destination inspection.

Tests:	**1) Wet ash analysis for oxides.**	**AWPA A7-75,A2-85 (Section 2,5,6).**
	2) X-ray.	**AWPA A9-86.**
	3) Atomic absorption.	**AWPA A7-75 and A11-83.**

ADD IN STANDARDS FOR INSULATORS & TRANSFORMERS:

The following paragraph shall be added as a new and first paragraph of sections for packaging and shipping:
"Insulator /transformer shall be shipped in non -returnable boxes manufactured from export quality preservative treated "wood". Wooden boxes shall be constructed from new lumber which shall be square sawn (wood without crossgrain), be of smooth surface, with no splits, warps, crooks, loose fibres decay or insect infestation. The timber used for standard wooden boxes shall be preservative treated in accordance with "American Wood Preservers' Association Standards" and as stipulated below:".

BANGLADESH RURAL ELECTRIFICATION BOARD
Office of the Timber Products Specialist & Environment Monitoring Cell
WOODEN PACKING SPECIFICATION SUBMISSION SHEET
(Attachment to the Tender Submission Sheet)
(To be filled by the Tenderer)

Form No. TPF 073-005
Version - 01
Approved date:22/07/2013

Sub-Package No----------

BREB SHIPPING BOX DESIGN NO. 1:

Applicable for all Line Hardwires (**"B"** Items), Conductor in Coils (**"F"** Items), Conductor Accessories (**"E"** Items), Underground Cable Accessories (**"F"** Items), Sectionalizing Devices (except Group Operated Air Breaker Switches and Reclosers) (**"H"** Items), Connectors (**"I"** Items), Meters and Metering Accessories (**"J"** Items), Street Light & Accessories (**"L"** Items), Miscellaneous (**"ME"** Items), Test Instruments (**"TI"** Items), Line Tools (**"TL"** Items), Capacitors and Accessories (**"K"** Items).

Technical Particulars	BREB Specification	Guaranteed Specification
1) Bidders' Name:	**To be mentioned.**	
2) Authorized Manufacturer Name:	**To be mentioned.**	
3) Standard of manufacturing:	**Must be:** As per BREB Design of Respective Bid Document.	
4) BREB Items:	**Must be furnished:** The appropriate Design for the Items as per BREB Design of Respective Bid Document.	
5) Physical Requirements:	**Must be as follows:** The box sheathing shall be fabricated from Exterior Grade Plywood (**EGPW**) with a minimum thickness of three-eighth (3/8") or Sawn Board Lumber (**SBL**). All material and equipment shall be packed for export shipment to a tropical climate in wooden shipping boxes that are sufficiently durable to withstand numerous handing. The shipping boxes shall strong enough to prevent loss from pilferage or damage sustained from stacking, shipping or handling. Workmanship in the manufacture of the wooden shipping boxes shall be of the highest standard and the material used shall be in accordance with the best commercial practices. All lumber used shall be new, well seasoned, sound, and free of splits, decay or an excessive number of knots. Plywood used shall be new, free of splits and decay and shall be exterior grade quality. **Note:** "Sufficiently durable" means either the lumber shall be completely heartwood or mixture of sapwood and heartwood with preservative treatment of lumber with CCB having penetration of complete sapwood and treatable heartwood (if any) and retention of w/w 1.56% dry oxides of CCB in an assay zone of 0" to 0.62" as per BREB Specification for Wooden Conductor Reels. The sapwood of any timber species is not sufficiently durable. "Well seasoned" means lumber shall be kiln dried; otherwise the lumber shall not be well seasoned.	
6) Dimension of Box:	**Must be as follows:** The nominal dimensions of Shipping Box Design Number 1 shall be three-fourth (3/4) of a meter in height, three-fourth (3/4) of a meter in width and one meter in length (Height=0.75M, Width=0.75M, Length=1.0M). **Note that** these are nominal dimensions and that the Supplier may slightly vary these dimensions to better accommodate the packaged commodities.	
7) Thickness & Dimension of Sawn Lumbers (inch):	**Must be as follows:** (1) The minimum width of the sawn boards shall be six inches (6"). (2) The minimum thickness of the sawn boards utilized for the sides and roof of the box shall be five-eighth of an inch (5/8"), (3) Whereas the floorboards shall have a minimum thickness of one inch (1"). (4) The minimum dimensions of the skid runner and header shall be three inches (3") by four inches (4") and the skid runner shall be hardwood. (5) The minimum dimensions of the frames and cross-braces shall be one inch (1") by four inches (4").	
8) Box Preparation:	**Must be as follows:** (i) The box shall be strapped with four (4) flat steel/PVC strapping bands and secured with crimped banding clips. (ii)Two (2) steel bands whose minimum width shall be three-fourth of an inch (3/4") or PVC bands whose minimum 15 mm (+/- 0.5 mm) width & 01(One) mm thickness shall be installed vertically and two (2) steel/ PVC bands shall be installed horizontally(lengthways) (iii) One-half inch (1/2") bolts shall be used to secure the header to the skid runner.	
9) Penalization formula for packing deviations detected during Post-Landing inspection of BREB Shipping Box Design No. 1	Must be as per BREB Board Decision No. 13848 (Board Session 525, Date: 20-01-2015)	

BANGLADESH RURAL ELECTRIFICATION BOARD
Office of the Timber Products Specialist & Environment Monitoring Cell
SPECIFICATION SUBMISSION SHEET
(Attachment to the Tender Submission Sheet)
(To be filled by the Tenderer)

Form No. TPF 073-004
Version - 01
Approved
date:22/07/2013

Sub-Package----------
WOODEN CONDUCTOR REELS (Applicable for all "D" and "N" Items)

THE BIDDER'S CONDUCTOR MANUFACTURER MUST FURNISH THE FOLLOWING INFORMATION AS SUPPLIED BY THE WOOD PRODUCTS TREATMENT PLANT WHO WILL SUPPLY REELS AND LAGGINGS FOR THIS SUPPLY CONTRACT:

1.NAME, LOCATION AND ADDRESS OF THE TREATMENT PLANT:.....	7.NAME OF THE OFFERED TIMBER SPECIES FROM THE REB LIST ONLY TO BE USED FOR THE CONSTRUCTION OF REELS /BOXES (BOTH COMMON AND SCIENTIFIC NAMES):.....
2.PRESSURE TO BE USED IN TREATING THE REELS/BOXES FOR THIS CONTRACT:.....(Kg/cm²)	
3.DRYING METHOD TO BE USED IN DRYING THE LUMBER TO BE USED IN REELS, LAGGINGS /BOXES:.....	8.NAME OF THE OFFERED PRESERVATIVE FROM THE REB LIST ONLY TO BE USED FOR TREATING LUMBERS (TRADE NAMES ARE NOT ELIGIBLE): .....
4.MOISTURE CONTENT TO BE ATTAINED WITH FURNISHED DRYING METHOD:.....	9. OFFERED PRESERVATIVE PENETRATION: .....(mm)
5.PROVIDE INFORMATION REGARDING THE TESTING FACILITIES AVAILABLE IN THE TREATMENT PLANT THAT WILL BE USED TO DETERMINE PRESERVATIVE PENETRATION, RETENTION AND MOISTURE CONTENT BEFORE TREATMENT:.....	10.OFFERED PRESERVATIVE RETENTION: .....(W/W%)
6.DESCRIBE OTHER PRESSURE TREATED WOOD PRODUCTS PRODUCED AND SOLD BY THIS PLANT:.....	11. OFFERED DESIGN NO. OF REELS/BOXES FROM THE REB LIST ONLY:.....
12. WOODEN REEL PRESERVATIVE TREATMENT REQUIRMENT CCB/ACC	
13. PENALIZATION FORMULA FOR DEVIATIONS DETECTIED DURING POST-LANDING INSPECTION IN WOODEN CONDUCTOR REELS (ALL "D " AND "N " ITEMS), MUST BE AS PER BREB BOARD DECISSION NO> 13848 (BOARD SESSION 525, DATED: 20-01-2015).	
WE CERTIFY THAT WE ARE AWARE OF THE REB SPECIFICATION UNDER THE LOAN IDENTIFIED AS .....BID PACKAGE .....INVITATION..... THE INFORMATION PROVIDED ABOVE IS CORRECT TO THE BEST OF OUR KNOWLEDGE AND IS SUBJECT TO VERIFICATION. WOOD REELS AND THEIR LAGGINGS/BOXES SHALL BE CONSTRUCTED FROM NEW LUMBER WHICH SHALL BE SQUARE SAWN, BE OF SMOOTH SURFACE, WITH NO SPLITS, WARPS, CROOKS, LOOSE FIBERS, DECAY OR INSECT INFESTATION. THE LUMBER USED SHALL BE PRESERVATIVE TREATED BY PRESSURE PROCESS TO ATTAIN PENETRATION AND RETENTION REQUIREMENTS AS STIPULATED IN REB'S STANDARD PUBLICATIONS.....AND THE LATEST REVISION THEREOF.	

NAME, SIGNATURE, TITLE, DATE AND SEAL OF THE BIDDER:	NAME, SIGNATURE, TITLE, DATE AND SEAL OF THE MNUFACTURER:	NAME, SIGNATURE, TITLE, DATE AND SEAL OF THE WOOD PRESERVING PLANT:
NAME PRINTED IN:.....	NAME PRINTED IN:.....	NAME PRINTED IN:.....
AUTHORIZED SIGNATURE:.....	AUTHORIZED SIGNATURE:.....	AUTHORIZED SIGNATURE:.....
TITLE AND DATE PRINTED IN:.....	TITLE AND DATE PRINTED IN:.....	TITLE AND DATE PRINTED IN:.....
SEAL:	SEAL:	SEAL:

THE BIDDER'S MANUFACTURING PLANT OR THE PLANT THAT WILL SUPPLY CONDUCTOR/INSULATOR/TRANSFORMER AND HIS SUB-CONTRACTOR THAT WILL FABRICATE THE REELS, LAGGINGS ON/IN WHICH THE GOODS WILL BE ARRANGED MUST ENCLOSE WITH THIS PROPOSAL A PRINTED ORIGINAL COPY OF BOOKLETS, BROCHURES, ANY AND ALL OTHER ORIGINAL INFORMATION THAT WILL PERMIT A TRUE AND UNBIASED OPINION OF ITS CAPABILITIES TO PRODUCE REELS, LAGGINGS IN CONFORMANCE WITH REB'S STANDARDS AND SPECIFICATIONS.