BIDDING DOCUMENT FOR

DESIGN, SUPPLY, INSTALLATION AND COMMISSIONING OF SPV PUMPING SYSTEM IN RANGPUR PBS-2.

BID PACKAGE NO.: SPIP-W-2

POWER SYSTEM EFFICIENCY IMPROVEMENT PROJECT

[ADB LOAN NO.: 2769-BAN, AND GRANT NO.: 0583-BAN (EF) & 0584-BAN (EF)]

PART I OF III (BIDDING PROCEDURES)

ISO 9001, ISO 14001 &
OHSAS 18001 Certified

BANGLADESH RURAL ELECTRIFICATION BOARD (BREB)
HEAD OFFICE, ACADEMIC BUILDING, 6TH FLOOR
NIKUNJA-2, KHILKHET, DHAKA-1229
BANGLADESH

SEPTEMBER 2019

Section 1: Instructions to Bidders

Table of Clauses

A. General 1-3

1. Scope of Bid 1-3
2. Source of Funds 1-3
3. Fraud and Corruption 1-3
4. Eligible Bidders 1-5
5. Eligible Plant and Services 1-6

B. Contents of Bidding Document 1-7

6. Sections of Bidding Document 1-7
7. Clarification of Bidding Document, Site Visit, Pre-Bid Meeting 1-7
8. Amendment of Bidding Document 1-8

C. Preparation of Bids 1-8

9. Cost of Bidding 1-8
10. Language of Bid 1-8
11. Documents Comprising the Bid 1-8
12. Letter of Bid and Schedules 1-9
13. Alternative Bids 1-9
14. Documents Establishing the Eligibility of Plant and Services 1-10
15. Documents Establishing the Eligibility and Qualifications of the Bidder 1-10
16. Documents Establishing Conformity of the Plant and Services 1-10
17. Technical Proposal, Subcontractors 1-10
18. Bid Prices and Discounts 1-11
19. Currencies of Bid and Payment 1-13
20. Period of Validity of Bids 1-13
21. Bid Security/Bid-Securing Declaration 1-13
22. Format and Signing of Bid 1-14

D. Submission and Opening of Bids 1-15

23. Submission, Sealing, and Marking of Bids 1-15
24. Deadline for Submission of Bids 1-15
25. Late Bids 1-15
26. Withdrawal, Substitution, and Modification of Bids 1-16
27. Bid Opening 1-16

E. Evaluation and Comparison of Bids 1-18

28. Confidentiality..... 1-18
29. Clarification of Bids 1-18
30. Deviations, Reservations, and Omissions 1-18
31. Examination of Technical Bids 1-18
32. Responsiveness of Technical Bid 1-19
33. Nonmaterial Nonconformities..... 1-19
34. Detailed Evaluation of Technical Bids..... 1-19
35. Eligibility and Qualification of the Bidder 1-20
36. Correction of Arithmetical Errors 1-20
37. Conversion to Single Currency 1-21
38. Domestic Preference..... 1-21
39. Evaluation and Comparison of Price Bids..... 1-21
40. Abnormally Low Bids..... 1-22
41. Employer's Right to Accept Any Bid, and to Reject Any or All Bids..... 1-23
42. Notice of Intention for Award of Contract 1-25

F. Award of Contract 1-23

43. Award Criteria..... 1-23
44. Notification of Award 1-23
45. Signing of Contract..... 1-24
46. Performance Security..... 1-24
47. Bidding-Related Complaints..... 1-26

A. General

1. Scope of Bid

1.1 In connection with the Invitation for Bids (IFB) indicated in the Bid Data Sheet (BDS), the Employer, as indicated in the BDS, issues this Bidding Document for the procurement of plant and services as specified in Section 6 (Employer's Requirements). The name, identification, and number of lot/s (contract/s) of the open competitive bidding (OCB) are provided in the BDS.

1.2 Throughout this Bidding Document,

(a) the term "in writing" means communicated in written form and delivered against receipt;

(b) except where the context requires otherwise, words indicating the singular also include the plural and words indicating the plural also include the singular; and

(c) "day" means calendar day.

2. Source of Funds

2.1 The Borrower or Recipient (hereinafter called "Borrower") indicated in the BDS has applied for or received financing (hereinafter called "funds") from the Asian Development Bank (hereinafter called "ADB") toward the cost of the project named in the BDS. The Borrower intends to apply a portion of the funds to eligible payments under the contract(s) for which this Bidding Document is issued.

2.2 Payments by ADB will be made only at the request of the Borrower and upon approval by ADB in accordance with the terms and conditions of the Financing Agreement between the Borrower and ADB (hereinafter called "Financing Agreement"), and will be subject in all respects to the terms and conditions of that Financing Agreement. No party other than the Borrower shall derive any rights from the Financing Agreement or have any claim to the funds.

3. Fraud and Corruption

3.1 ADB's Anticorruption Policy (1998, as amended to date) requires Borrowers (including beneficiaries of ADB-financed activity), as well as Bidders, Suppliers, and Contractors under ADB-financed contracts, observe the highest standard of ethics during the procurement and execution of such contracts. In pursuance of this policy, ADB

(a) defines, for the purposes of this provision, the terms set forth below as follows:

(i) "corrupt practice" means the offering, giving, receiving, or soliciting, directly or indirectly, anything of value to influence improperly the actions of another party;

(ii) "fraudulent practice" means any act or omission, including a misrepresentation, that knowingly or recklessly misleads, or attempts to mislead, a party to obtain a financial or other benefit or to avoid an obligation;

(iii) "coercive practice" means impairing or harming, or threatening to impair or harm, directly or indirectly, any party or the property of the party to influence improperly the actions of a party;

(iv) "collusive practice" means an arrangement between two or more parties designed to achieve an improper purpose, including influencing improperly the actions of another party;

(v) "abuse" means theft, waste, or improper use of assets related to ADB-related activity, either committed intentionally or through reckless disregard;

(vi) "conflict of interest" means any situation in which a party has

interests that could improperly influence that party's performance of official duties or responsibilities, contractual obligations, or compliance with applicable laws and regulations;

(vii) "obstructive practice" means (a) deliberately destroying, falsifying, altering, or concealing of evidence material to an ADB investigation, or deliberately making false statements to investigators, with the intent to impede an ADB investigation; (b) threatening, harassing, or intimidating any party to prevent it from disclosing its knowledge of matters relevant to a Bank investigation or from pursuing the investigation; or (c) deliberate acts intended to impede the exercise of ADB's contractual rights of audit or inspection or access to information; and

(viii) "integrity violation" is any act, as defined under ADB's Integrity Principles and Guidelines (2015, as amended from time to time), which violates ADB's Anticorruption Policy, including (i) to (vii) above and the following: violations of ADB sanctions, retaliation against whistleblowers or witnesses, and other violations of ADB's Anticorruption Policy, including failure to adhere to the highest ethical standard.

(b) will reject a proposal for award if it determines that the Bidder recommended for award has, directly or through an agent, engaged in corrupt, fraudulent, collusive, coercive, or obstructive practices or other integrity violations in competing for the Contract;

(c) will cancel the portion of the financing allocated to a contract if it determines at any time that representatives of the Borrower or of a beneficiary of ADB-financing engaged in corrupt, fraudulent, collusive, coercive, or obstructive practices or other integrity violations during the procurement or the execution of that contract, without the Borrower having taken timely and appropriate action satisfactory to ADB to remedy the situation;

(d) will impose remedial actions on a firm or an individual, at any time, in accordance with ADB's Anticorruption Policy and Integrity Principles and Guidelines, including declaring ineligible, either indefinitely or for a stated period of time, to participate[1] in ADB-financed,-administered, or -supported activities or to benefit from an ADB-financed, -administered, or -supported contract, financially or otherwise, if it at any time determines that the firm or individual has, directly or through an agent, engaged in corrupt, fraudulent, collusive, coercive or obstructive practices or other integrity violations; and

(e) will have the right to require that a provision be included in the Bidding Documents and in contracts financed by ADB, requiring Bidders, suppliers and contractors to permit ADB or its representative to inspect their accounts and records and other documents relating to the bid submission and contract performance and to have them audited by auditors appointed by ADB.

3.2 All Bidders, consultants, contractors, suppliers, and other third parties engaged or involved in ADB-related activities have a duty to cooperate fully in any screening or investigation when requested by ADB to do so. Such cooperation includes, but is not limited to, the following:

(a) being available to be interviewed and replying fully and truthfully to all questions asked;

(b) providing ADB with any items requested that are within the party's control including, but not limited to, documents and other physical objects;

[1] Whether as a Contractor, Subcontractor, Consultant, Manufacturer or Supplier, or Service Provider; or in any other capacity (different names are used depending on the particular Bidding Document).

(c) upon written request by ADB, authorizing other related entities to release directly to ADB such information that is specifically and materially related, directly or indirectly, to the said entities or issues which are the subject of the investigation;

(d) cooperating with all reasonable requests to search or physically inspect their person and/or work areas, including files, electronic databases, and personal property used on ADB activities, or that utilizes ADB's Information and Communications Technology (ICT) resources or systems (including mobile phones, personal electronic devices, and electronic storage devices such as external disk drives);

(e) cooperating in any testing requested by ADB, including but not limited to, fingerprint identification, handwriting analysis, and physical examination and analysis; and

(f) preserving and protecting confidentiality of all information discussed with, and as required by, ADB.

3.3 All Bidders, consultants, contractors and suppliers shall ensure that, in its contract with its sub-consultants, subcontractors, and other third parties engaged or involved in ADB-related activities, such sub-consultants, subcontractors, and other third parties similarly undertake the foregoing duty to cooperate fully in any screening or investigation when requested by ADB to do so.

3.4 The Employer hereby puts the Bidder on notice that the Bidder or any Joint Venture partner of the Bidder (if any) may not be able to receive any payments under the Contract if the Bidder or any of its Joint Venture partners, as appropriate, is, or is owned (in whole or in part) by a person or entity subject to applicable sanctions.

3.5 Furthermore, Bidders shall be aware of the provision stated in GCC 9.6 and GCC 42.2.1 (c).

4. Eligible Bidders

4.1 A Bidder may be a natural person, private entity, or government-owned enterprise subject to ITB 4.5 - or any combination of them with a formal intent to enter into an agreement or under an existing agreement in the form of a Joint Venture. In the case of a Joint Venture,

(a) all partners shall be jointly and severally liable, and

(b) the Joint Venture shall nominate a Representative who shall have the authority to conduct all business for and on behalf of any and all the partners of the Joint Venture during the bidding process and, in the event the Joint Venture is awarded the Contract, during contract execution.

4.2 A Bidder, and all partners constituting the Bidder, shall have the nationality of an eligible country, in accordance with Section 5 (Eligible Countries). A Bidder shall be deemed to have the nationality of a country if the Bidder is a citizen or is constituted, incorporated, or registered, and operates in conformity with the provisions of the laws of that country. This criterion shall also apply to the determination of the nationality of proposed subcontractors or suppliers for any part of the Contract including related services.

4.3 A Bidder shall not have a conflict of interest. All Bidders found to have a conflict of interest shall be disqualified. A Bidder may be considered to be in a conflict of interest with one or more parties in this bidding process if any of, including but not limited to, the following apply:

(a) they have controlling shareholders in common; or

(b) they receive or have received any direct or indirect subsidy from any of

them; or

(c) they have the same legal representative for purposes of this bid; or

(d) they have a relationship with each other, directly or through common third parties, that puts them in a position to have access to material information about or improperly influence the bid of another Bidder, or influence the decisions of the Employer regarding this bidding process; or

(e) a Bidder participates in more than one bid in this bidding process, either individually or as a partner in a Joint Venture, except for alternative offers permitted under ITB 13. This will result in the disqualification of all Bids in which it is involved. However, subject to any finding of a conflict of interest in terms of ITB 4.3 (a) - (d) above, this does not limit the participation of a Bidder as a subcontractor in another Bid or of a firm as a subcontractor in more than one Bid; or

(f) a Bidder, Joint Venture partner, associates, parent company or any affiliated entity, participated as a consultant in the preparation of the design or technical specifications of the plant and services that are the subject of the Bid; or

(g) a Bidder was affiliated with a firm or entity that has been hired (or is proposed to be hired) by the Employer or Borrower as Project Manager for the Contract; or

(h) a Bidder would be providing goods, works, or non consulting services resulting from or directly related to consulting services for the preparation or implementation of the project specified in the BDS ITB 2.1 that it provided or were provided by any affiliate that directly or indirectly controls, is controlled by, or is under common control with that firm.

4.4 A firm shall not be eligible to participate in any procurement activities under an ADB-financed, -administered, or -supported project while under temporary suspension or debarment by ADB pursuant to its Anticorruption Policy (see ITB 3), whether such debarment was directly imposed by ADB, or enforced by ADB pursuant to the Agreement for Mutual Enforcement of Debarment Decisions. A bid from a temporary suspended or debarred firm will be rejected.

4.5 Government-owned enterprises in the Borrower's country shall be eligible only if they can establish that they (i) are legally and financially autonomous, (ii) operate under commercial law, and (iii) are not dependent agencies of the Employer.

4.6 A Bidder shall not be under suspension from bidding by the Employer as the result of the execution of a Bid–Securing Declaration.

4.7 Bidders shall provide such evidence of their continued eligibility satisfactory to the Employer, as the Employer shall reasonably request.

4.8 Firms shall be excluded if by an act of compliance with a decision of the United Nations Security Council taken under Chapter VII of the Charter of the United Nations, the Borrower's country prohibits any import of goods or contracting of works or services from that country or any payments to persons or entities in that country.

4.9 In case a prequalification process has been conducted prior to the bidding process, this bidding is open only to prequalified Bidders.

5. Eligible Plant and Services

5.1 The plant and services to be supplied under the Contract shall have their origin in eligible source countries as defined in ITB 4.2 and all expenditures

under the Contract will be limited to such plant and services.

5.2 For purposes of ITB 5.1 above, “origin” means the place where the plant, or component parts thereof are mined, grown, produced, or manufactured, and from which the services are provided. Plant components are produced when, through manufacturing, processing, or substantial or major assembling of components, a commercially recognized product results that is substantially in its basic characteristics or in purpose or utility from its components.

B. Contents of Bidding Document

6. Sections of Bidding Document

6.1 The Bidding Document consists of Parts I, II, and III, which include all the sections indicated below, and should be read in conjunction with any addenda issued in accordance with ITB 8.

PART I Bidding Procedures
Section 1 - Instructions to Bidders (ITB)
Section 2 - Bid Data Sheet (BDS)
Section 3 - Evaluation and Qualification Criteria (EQC)
Section 4 - Bidding Forms (BDF)
Section 5 - Eligible Countries (ELC)

PART II Requirements
Section 6 - Employer’s Requirements (ERQ)

PART III Conditions of Contract and Contract Forms
Section 7 - General Conditions of Contract (GCC)
Section 8 - Special Conditions of Contract (SCC)
Section 9 - Contract Forms (COF)

6.2 The IFB issued by the Employer is not part of the Bidding Document.

6.3 The Employer is not responsible for the completeness of the Bidding Document and its addenda, if they were not obtained directly from the source stated by the Employer in the IFB.

6.4 The Bidder is expected to examine all instructions, forms, terms, and specifications in the Bidding Document. Failure to furnish all information or documentation required by the Bidding Document may result in the rejection of the Bid.

7. Clarification of Bidding Document, Site Visit, Pre-Bid Meeting

7.1 A prospective Bidder requiring any clarification on the Bidding Document shall contact the Employer in writing at the Employer’s address indicated in the BDS, or raise inquiries during the pre-bid meeting if provided for in accordance with ITB 7.4. The Employer will respond to any request for clarification, provided that such request is received no later than 21 days prior to the deadline for submission of bids. The Employer’sresponse shall be in writing with copies to all Bidders who have acquired the Bidding Document in accordance with ITB 6.3, including a description of the inquiry but without identifying its source. Should the Employer deem it necessary to amend the Bidding Document as a result of a request for clarification, it shall do so following the procedure under ITB 8 and ITB 24.2.

7.2 The Bidder is advised to visit and examine the site where the plant is to be installed and its surroundings and obtain for itself on its own responsibility all information that may be necessary for preparing the Bid and entering into a contract for the provision of plant and services. The costs of visiting the site shall be at the Bidder’s own expense.

7.3 The Bidder and any of its personnel or agents will be granted permission by the Employer to enter its premises and lands for the purpose of such

visit, but only upon the express condition that the Bidder, its personnel, and agents, will release and indemnify the Employer and its personnel and agents from and against all liability in respect thereof, and will be responsible for death or personal injury, loss of or damage to property, and any other loss, damage, costs, and expenses incurred as a result of the inspection.

7.4 The Bidder's designated representative is invited to attend a pre-bid meeting, if provided for in the BDS. The purpose of the meeting will be to clarify issues and to answer questions on any matter that may be raised at that stage.

7.5 The Bidder is requested to submit any questions in writing, to reach the Employer not later than 1 week before the pre-bid meeting.

7.6 Minutes of the pre-bid meeting, including the text of the questions raised, without identifying the source, and the responses given, together with any responses prepared after the meeting, will be transmitted promptly to all Bidders who have acquired the Bidding Document in accordance with ITB 6.3. Any modification to the Bidding Document that may become necessary as a result of the pre-bid meeting shall be made by the Employer exclusively through the issue of an addendum pursuant to ITB 8 and not through the minutes of the pre-bid meeting.

7.7 Nonattendance at the pre-bid meeting will not be a cause for disqualification of a Bidder.

8. Amendment of Bidding Document

8.1 At any time prior to the deadline for submission of Bids, the Employer may amend the Bidding Document by issuing addenda.

8.2 Any addendum issued shall be part of the Bidding Document and shall be communicated in writing to all who have obtained the Bidding Document from the Employer in accordance with ITB 6.3.

8.3 To give prospective Bidders reasonable time in which to take an addendum into account in preparing their Bids, the Employer may, at its discretion, extend the deadline for the submission of Bids, pursuant to ITB 24.2

C. Preparation of Bids

9. Cost of Bidding

9.1 The Bidder shall bear all costs associated with the preparation and submission of its Bid, and the Employer shall in no case be responsible or liable for those costs, regardless of the conduct or outcome of the bidding process.

10. Language of Bid

10.1 The Bid, as well as all correspondence and documents relating to the bid exchanged by the Bidder and the Employer, shall be written in the language specified in the BDS. Supporting documents and printed literature that are part of the Bid may be in another language provided they are accompanied by an accurate translation of the relevant passages into the language specified in the BDS, in which case, for purposes of interpretation of the Bid, such translation shall govern.

11. Documents Comprising the Bid

11.1 The Bid shall comprise two envelopes submitted simultaneously, one containing the Technical Bid and the other the Price Bid, both envelopes enclosed together in an outer single envelope.

11.2 The Technical Bid submitted by the Bidder shall comprise the following:

(a) Letter of Technical Bid;

(b) Bid Security or Bid-Securing Declaration, in accordance with ITB 21;

(c) alternative Bids, if permissible, in accordance with ITB 13;

(d) written confirmation authorizing the signatory of the Bid to commit the Bidder, in accordance with ITB 22.2;

(e) documentary evidence in accordance with ITB 14.1, that the plant and services offered by the Bidder in its Bid or in any alternative Bid, if permitted, are eligible;

(f) documentary evidence in accordance with ITB 15, the Bidder's eligibility and qualifications to perform the contract if its Bid is accepted;

(g) Technical Proposal in accordance with ITB 17.

(h) documentary evidence in accordance with ITB 16, that the plant and services offered by the Bidder conform to the Bidding Document;

(i) in the case of a bid submitted by a Joint Venture, the Bid shall include a copy of the Joint Venture Agreement entered into by all partners. Alternatively, a Letter of Intent to execute a Joint Venture Agreement in the event of a successful bid shall be signed by all partners and submitted with the Bid, together with a copy of the proposed agreement;

(j) list of subcontractors, in accordance with ITB 17.2; and

(k) any other document required in the BDS.

11.3 The Price Bid submitted by the Bidder shall comprise the following:

(a) Letter of Price Bid;

(b) completed schedules as required, including Price Schedules, in accordance with ITB 12 and ITB 18;

(c) alternative price Bids, if permissible, in accordance with ITB 13; and

(d) any other document required in the BDS.

12. Letter of Bid and Schedules

12.1 The Letters of Technical Bid and Price Bid, and the Schedules, and all documents listed under ITB 11, shall be prepared using the relevant forms furnished in Section 4 (Bidding Forms). The forms must be completed without any alterations to the text, and no substitutes shall be accepted. All blank spaces shall be filled in with the information requested and as required in the BDS.

13. Alternative Bids

13.1 The BDS indicates whether alternative Bids are allowed. If they are allowed, the BDS will also indicate whether they are permitted in accordance with ITB 13.3, or invited in accordance with ITB13.2 and/or ITB 13.4.

13.2 When alternatives to the Time Schedule are explicitly invited, a statement to that effect will be included in the BDS, and the method of evaluating different time schedules will be described in Section 3 (Evaluation and Qualification Criteria).

13.3 Except as provided under ITB 13.4 below, Bidders wishing to offer technical alternatives to the Employer's requirements as described in the Bidding Document must also provide: (i) a price at which they are prepared to offer a plant meeting the Employer's requirements; and (ii) all

information necessary for a complete evaluation of the alternatives by the Employer, including drawings, design calculations, technical specifications, breakdown of prices, and proposed installation methodology and other relevant details. Only the technical alternatives, if any, of the lowest evaluated Bidder conforming to the basic technical requirements shall be considered by the Employer.

13.4 When Bidders are invited in the BDS to submit alternative technical solutions for specified parts of the facilities, such parts shall be described in Section 6 (Employer's Requirements). Technical alternatives for the specific parts of the facilities that comply with the performance and technical criteria specified for the plant and services shall be considered by the Employer on their own merits, pursuant to ITB 32.

14. Documents Establishing the Eligibility of Plant and Services

14.1 To establish the eligibility of the plant and services in accordance with ITB 5, Bidders shall complete the Country of Origin Declaration Form included in Section 4 (Bidding Forms).

15. Documents Establishing the Eligibility and Qualifications of the Bidder

15.1 To establish its eligibility and qualifications to perform the Contract in accordance with Section 3 (Evaluation and Qualification Criteria), the Bidder shall provide the information requested in the corresponding information sheets included in Section 4 (Bidding Forms).

15.2 Domestic Bidders, individually or in Joint Ventures, applying for eligibility for domestic preference shall supply all information required to satisfy the criteria for eligibility as described in ITB 38.

16. Documents Establishing Conformity of the Plant and Services

16.1 The documentary evidence of the conformity of the plant and services to the Bidding Document may be in the form of literature, drawings and data, and shall furnish:

(a) a detailed description of the essential technical and performance characteristics of the plant and services, including the functional guarantees of the proposed plant and services, in response to the Specification;

(b) a list giving full particulars, including available sources, of all spare parts and special tools necessary for the proper and continuing functioning of the plant for the period named in the BDS, following completion of plant and services in accordance with provisions of the contract; and

(c) a commentary on the Employer's Specifications and adequate evidence demonstrating the substantial responsiveness of the plant and services to those specifications. Bidders shall note that standards for workmanship, materials and equipment designated by the Employer in the Bidding Document are intended to be descriptive (establishing standards of quality and performance) only and not restrictive. The Bidder may substitute alternative standards, brand names and/or catalog numbers in its Bid, provided that it demonstrates to the Employer's satisfaction that the substitutions are substantially equivalent or superior to the standards designated in the Specifications.

17. Technical Proposal, Subcontractors

17.1 The Bidder shall furnish a Technical Proposal including a statement of work methods, equipment, personnel, schedule and any other information as stipulated in Section 4 (Bidding Forms), in sufficient detail to demonstrate the adequacy of the Bidders' proposal to meet the work requirements and the completion time.

17.2 For major items of plant and services as listed by the Employer in Criterion 2.5 of Section 3 (Evaluation and Qualification Criteria), which the Bidder intends to purchase or subcontract, the Bidder shall give details of the name and nationality of the proposed Subcontractors, including Manufacturers, for each of those items. In addition, the Bidder shall include in its Bid information establishing compliance with the requirements specified by the Employer for these items. Bidders are free to list more than one Subcontractor against each item of the plant and services. Quoted rates and prices will be deemed to apply to whichever Subcontractor is appointed, and no adjustment of the rates and prices will be permitted.

17.3 The Bidder shall be responsible for ensuring that any Subcontractor proposed complies with the requirements of ITB 4, and that any plant, or services to be provided by the Subcontractor comply with the requirements of ITB 5 and ITB 15.1

18. Bid Prices and Discounts

18.1 Unless otherwise specified in the BDS and/or Section 6 (Employer's Requirements), bidders shall quote for the entire plant and services on a "single responsibility" basis such that the total Bid price covers all the Contractor's obligations mentioned in or to be reasonably inferred from the Bidding Document in respect of the design, manufacture, including procurement and subcontracting (if any), delivery, construction, installation, and completion of the plant. This includes all requirements under the Contractor's responsibilities for testing, pre-commissioning and commissioning of the plant and, where so required by the Bidding Document, the acquisition of all permits, approvals, and licenses, etc.; the operation, maintenance, and training services and such other items and services as may be specified in the Bidding Document, all in accordance with the requirements of the General Conditions. Items against which no price is entered by the Bidder will not be paid for by the Employer when executed and shall be deemed to be covered by the prices for other items.

18.2 Bidders are required to quote the price for the commercial, contractual and technical obligations outlined in the Bidding Document.

18.3 Bidders shall give a breakdown of the prices in the manner and detail called for in the Price Schedules included in Section 4 (Bidding Forms). Where no different Price Schedules are included in the Bidding Document, Bidders shall present their prices in the following manner: Separate numbered Schedules included in Section 4 (Bidding Forms) shall be used for each of the following elements. The total amount from each Schedule (Nos. 1 to 4) shall be summarized in a Grand Summary (Schedule No. 5) giving the total bid price(s) to be entered in the Letter of Price Bid. Absence of the total bid price in the Letter of Price Bid may result in the rejection of the Bid.

Schedule No. 1: Plant and Mandatory Spare Parts Supplied from Abroad

Schedule No. 2: Plant and Mandatory Spare Parts Supplied from Within the Employer's Country

Schedule No. 3: Design Services

Schedule No. 4: Installation and Other Services

Schedule No. 5 Grand Summary (Schedule Nos. 1 to 4)

Schedule No. 6: Recommended Spare Parts

Bidders shall note that the plant and mandatory spare parts included in

Schedule Nos. 1 and 2 above exclude materials used for civil, building, and other construction works. All such materials shall be included and priced under Schedule No. 4, Installation and Other Services.

18.4 In the Schedules, Bidders shall give the required details and a breakdown of their prices as follows:

(a) Plant to be Supplied from Abroad (Schedule No. 1):

(i) the price of the plant shall be quoted carriage and insurance paid (CIP)-named place of destination basis specified in the BDS;

(ii) all customs duties and other taxes paid or payable in the Employer's country on the plant if the contract is awarded to the Bidder; and

(iii) the total price for the plant.

(b) Plant Supplied from Within the Employer's Country (Schedule No. 2):

(i) the price of the plant shall be quoted on an EXW Incoterm basis (ex works, ex factory, ex warehouse, ex showroom, as applicable), including all customs duties and sales and other taxes already paid or payable on the components and raw material used in the manufacture or assembly of plant quoted ex works or ex factory, or on the previously imported plant of foreign origin quoted ex warehouse, ex showroom;

(ii) sales tax and other taxes payable in the Employer's country on the plant if the contract is awarded to the Bidder, and

(iii) the total price for the plant.

(c) Design Services. (Schedule No. 3). Rates or prices shall include all taxes, duties, levies, and charges payable in the Employer's country as of 28 days prior to the deadline for submission of Bids.

(d) Installation and Other Services (Schedule No. 4)shall be quoted separately and shall include rates or prices for local transportation, insurance, and other services incidental to delivery of the plant, all labor, contractor's equipment, temporary works, materials, consumables, and all matters and things of whatsoever nature, including operations and maintenance services, the provision of operations and maintenance manuals, training, etc., where identified in the Bidding Document, as necessary for the proper execution of the installation and other services, including all taxes, duties, levies, and charges payable in the Employer's country as of 28 days prior to the deadline for submission of bids.

(e) Recommended spare parts (Schedule No. 6)shall be quoted separately as specified in either subparagraph (a) or (b) above in accordance with the origin of the spare parts.

18.5 The current edition of Incoterms, published by the International Chamber of Commerce shall govern.

18.6 The prices shall be either fixed or adjustable as specified in the BDS.

(a) In the case of Fixed Price, prices quoted by the Bidder shall be fixed during the Bidder's performance of the contract and not subject to variation on any account. A Bid submitted with an adjustable price quotation will be treated as nonresponsive and rejected.

(b) In the case of Adjustable Price, prices quoted by the Bidder shall be subject to adjustment during performance of the contract to reflect changes in the cost elements such as labor, material, transport, and

contractor's equipment in accordance with the procedures specified in the corresponding appendix to the Contract Agreement. A Bid submitted with a fixed price quotation will be treated as nonresponsive and be rejected. The Bidder shall furnish the indexes (e.g. for labor and materials), their weightings and source in the Tables of Adjustment Data included in Section 4 (Bidding Forms). The Employer may require the Bidder to justify its proposed indexes and weightings. Any bid that omits indexes and weightings shall be subject to clarification with the Bidder.

18.7 If so indicated in BDS 1.1, Bids are being invited for individual lots (contracts) or for any combination of lots (packages). Bidders wishing to offer any price reduction (discount) for the award of more than one contract shall specify in their Letter of Price Bid the price reductions applicable to each package, or alternatively, to individual contracts within the package, and the manner in which the price reductions will apply.

19. Currencies of Bid and Payment

19.1 The currency(ies) of the bid shall be, as specified in the BDS.

19.2 Bidders may be required by the Employer to justify, to the Employer's satisfaction, their local and foreign currency requirements.

20. Period of Validity of Bids

20.1 Bids shall remain valid for the period specified in the BDS after the bid submission deadline date prescribed by the Employer. A bid valid for a shorter period shall be rejected by the Employer as nonresponsive.

20.2 In exceptional circumstances, prior to the expiration of the bid validity period, the Employer may request Bidders to extend the period of validity of their Bids. The request and the responses shall be made in writing. If a bid security is requested in accordance with ITB 21, it shall also be extended 28 days beyond the deadline of the extended bid validity period. A Bidder may refuse the request without forfeiting its bid security. A Bidder granting the request shall not be required or permitted to modify its Bid.

21. Bid Security/ Bid Securing Declaration

21.1 Unless otherwise specified in the BDS, the Bidder shall furnish as part of its Bid, in original form, either a Bid-Securing Declaration or a bid security as specified in the BDS. In the case of a bid security, the amount and currency shall be as specified in the BDS.

21.2 If a Bid-Securing Declaration is required pursuant to ITB 21.1, it shall use the form included in Section 4 (Bidding Forms). The Employer will declare a Bidder ineligible to be awarded a Contract for a specified period of time, as indicated in the BDS, if a Bid-Securing Declaration is executed.

21.3 If a bid security is specified pursuant to ITB 21.1, the bid security shall be, at the Bidder's option, in any of the following forms:

(a) an unconditional bank guarantee,
(b) an irrevocable letter of credit,
(c) a cashier's or certified check, or
(d) SWIFT message in the form of MT760.

all from a reputable source from an eligible country as described in Section 5 (Eligible Countries).In the case of a bank guarantee, the bid security shall be submitted using either the Bid Security Form included in Section 4 (Bidding Forms) or another form acceptable to the Employer. The form must include the complete name of the Bidder. The bid security shall be

valid for 28 days beyond the original validity period of the Bid, or beyond any period of extension if requested under ITB 20.2.

21.4 Unless otherwise specified in the BDS, any Bid not accompanied by a substantially compliant bid security or Bid-Securing Declaration, if one is required in accordance with ITB 21.1,shall be rejected by the Employer as nonresponsive.

21.5 If a bid security is specified pursuant to ITB 21.1, the bid security of the unsuccessful Bidder shall be returned promptly upon the successful Bidder's furnishing of the performance security pursuant to ITB 46.

21.6 If a bid security is specified pursuant to ITB 21.1, the bid security of successful Bidders shall be returned promptly once the successful Bidder has signed the Contract and furnished the required performance security.

21.7 The bid security may be forfeited or the Bid-Securing Declaration executed, if

(a) notwithstanding ITB 26.3, a Bidder withdraws its Bid during the period of bid validity specified by the Bidder on the Letters of Technical Bid and Price Bid, except as provided in ITB 20.2 or

(b) the successful Bidder fails to:

(i) sign the Contract in accordance with ITB 45;

(ii) furnish a performance security in accordance with ITB 46; or

(iii) accept the arithmetical corrections of its Bid in accordance with ITB 36.

21.8 If the bid security is required as per ITB 21.1, the bid security of a Joint Venture shall be in the name of the Joint Venture that submits the Bid. If the Joint Venture has not been legally constituted at the time of bidding, the bid security shall be in the name of any or all of the Joint Venture partners. If the Bid-Securing Declaration is required as per ITB 21.1, the Bid-Securing Declaration of a Joint Venture shall be in the name of the Joint Venture that submits the Bid. If the Joint Venture has not been legally constituted at the time of bidding, the Bid-Securing Declaration shall be in the names of all future partners as named in the letter of intent referred to in ITB 4.1.

22. Format and Signing of Bid

22.1 The Bidder shall prepare one original set of the Technical Bid and one original set of the Price Bidcomprising the Bid as described in ITB 11 and clearly mark it "ORIGINAL - TECHNICAL BID" and "ORIGINAL - PRICE BID". Alternative bids, if permitted in accordance with ITB 13, shall be clearly marked "ALTERNATIVE". In addition, the Bidder shall submit copies of the Bid, in the number specified in the BDS and clearly mark each of them "COPY." In the event of any discrepancy between the original and the copies, the original shall prevail.

22.2 The original and all copies of the Bid shall be typed or written in indelible ink and shall be signed by a person duly authorized to sign on behalf of the Bidder. This authorization shall consist of a written confirmation as specified in the BDS and shall be attached to the Bid. The name and position held by each person signing the authorization must be typed or printed below the signature. If a Bidder submits a deficient authorization, the Bid shall not be rejected in the first instance. The Employer shall request the Bidder to submit an acceptable authorization within the number of days as specified in the BDS. Failure to provide an acceptable authorization within the period stated in the Employer's request shall cause the rejection of the Bid. If either the Letter of Technical Bid or Letter of Price Bid or the Bid-Securing Declaration (if applicable) is not signed, the Bid shall be rejected.

22.3 A Bid submitted by a Joint Venture shall be signed so as to be legally binding on all partners.

22.4 Any amendments such as interlineations, erasures, or overwriting shall be valid only if they are signed or initialed by the person signing the Bid.

D. Submission and Opening of Bids

23. Submission, Sealing, and Marking of Bids

23.1 Bidders may submit their Bids by mail or by hand. When so specified in the BDS, Bidders shall have the option of submitting their Bids electronically. Procedures for submission, sealing and marking are as follows:

(a) Bidders submitting Bids by mail or by hand shall enclose the original and each copy of the Bid, including alternative Bids, if permitted in accordance with ITB 13, in separate sealed envelopes, duly marking the envelopes as "ORIGINAL," "ALTERNATIVE," and "COPY." These envelopes containing the original and the copies shall then be enclosed in one single envelope. The rest of the procedure shall be in accordance with ITB 23.2 to ITB 23.6.

(b) Bidders submitting Bids electronically shall follow the electronic bid submission procedures specified in the BDS.

23.2 The inner and outer envelopes shall

(a) bear the name and address of the Bidder,

(b) be addressed to the Employer in accordance with ITB 24.1, and

(c) bear the specific identification of this bidding process indicated in the BDS 1.1.

23.3 The outer envelopes and the inner envelopes containing the Technical Bid shall bear a warning not to open before the time and date for the opening of Technical Bid, in accordance with ITB 27.1.

23.4 The inner envelopes containing the Price Bid shall bear a warning not to open until advised by the Employer in accordance with ITB 27.7.

23.5 Alternative Bids, if permissible in accordance with ITB 13, shall be prepared, sealed, marked, and delivered in accordance with the provisions of ITB 20 and ITB 21, with the inner envelopes marked in addition "ALTERNATIVE NO…." as appropriate.

23.6 If all envelopes are not sealed and marked as required, the Employer will assume no responsibility for the misplacement or premature opening of the Bid.

24. Deadline for Submission of Bids

24.1 Bids must be received by the Employer at the address and no later than the date and time indicated in the BDS.

24.2 The Employer may, at its discretion, extend the deadline for the submission of bids by amending the Bidding Document in accordance with ITB 8, in which case all rights and obligations of the Employer and Bidders previously subject to the deadline shall thereafter be subject to the deadline as extended.

25. Late Bids

25.1 The Employer shall not consider any Bid that arrives after the deadline for submission of Bids, in accordance with ITB 24. Any Bid received by the

Employer after the deadline for submission of Bids shall be declared late, rejected, and returned unopened to the Bidder.

26. Withdrawal, Substitution, and Modification of Bids

26.1 A Bidder may withdraw, substitute, or modify its Bid after it has been submitted by sending a written notice, duly signed by an authorized representative, and shall include a copy of the authorization in accordance with ITB 22.2 (except for withdrawal notices, which do not require copies). The corresponding substitution or modification of the Bid must accompany the respective written notice. All notices must be:

(a) prepared and submitted in accordance with ITB 22 and ITB 23 (except for withdrawal notices, which do not require copies), and in addition, the respective envelopes shall be clearly marked "WITHDRAWAL," "SUBSTITUTION," "MODIFICATION;" and

(b) received by the Employer prior to the deadline prescribed for submission of Bids, in accordance with ITB 24.

26.2 Bids requested to be withdrawn in accordance with ITB 26.1 shall be returned unopened to the Bidders.

26.3 No Bid may be withdrawn, substituted, or modified in the interval between the deadline for submission of Bids and the expiration of the period of bid validity specified by the Bidder on the Letter of Technical Bid or any extension thereof.

27. Bid Opening

27.1 The Employer shall open the Technical Bids in public at the address, on the date, and time specified in the BDS in the presence of Bidder's designated representatives and anyone who choose to attend. Any specific electronic bid opening procedures required if electronic bidding is permitted in accordance with ITB 23.1, shall be as specified in the BDS.The Price Bids will remain unopened and will be held in custody of the Employer until the specified time of their opening. If the Technical Bid and the Price Bid are submitted together in one envelope, the Employer may reject the entire Bid. Alternatively, the Price Bid may be immediately resealed for later evaluation.

27.2 First, envelopes marked "WITHDRAWAL" shall be opened and read out and the envelope with the corresponding Bid shall not be opened, but returned to the Bidder. No bid withdrawal shall be permitted unless the corresponding withdrawal notice contains a valid authorization to request the withdrawal and is read out at bid opening.

27.3 Second, outer envelopes marked "SUBSTITUTION" shall be opened. The inner envelopes containing the Substitution Technical Bid and/or Substitution Price Bid shall be exchanged for the corresponding envelopes being substituted, which are to be returned to the Bidder unopened. Only the Substitution Technical Bid, if any, shall be opened, read out, and recorded. Substitution Price Bid will remain unopened in accordance with ITB 27.1. No envelope shall be substituted unless the corresponding Substitution Notice contains a valid authorization to request the substitution and is read out and recorded at bid opening.

27.4 Next, outer envelopes marked "MODIFICATION" shall be opened. No Technical Bid and/or Price Bid shall be modified unless the corresponding Modification Notice contains a valid authorization to request the modification and is read out and recorded at the opening of Technical Bids. Only the Technical Bids, both Original as well as Modification, are to be opened, read out, and recorded at the opening. Price Bids, both Original as well as Modification, will remain unopened in accordance with ITB 27.1.

27.5 All other envelopes holding the Technical Bids shall be opened one at a

time, and the following read out and recorded:

(a) the name of the Bidder;

(b) whether there is a modification or substitution;

(c) the presence of a bid security or a Bid-Securing Declaration, if required; and

(d) any other details as the Employer may consider appropriate.

Only Technical Bids and alternative Technical Bids read out and recorded at bid opening shall be considered for evaluation. Unless otherwise specified in the BDS, all pages of the Letter of Technical Bid are to be initialed by at least three representatives of the Employer attending the bid opening.No Bid shall be rejected at the opening of Technical Bids except for late Bids, in accordance with ITB 25.1.

27.6 The Employer shall prepare a record of the opening of Technical Bids that shall include, as a minimum: the name of the Bidder and whether there is a withdrawal, substitution, or modification; and alternative Bids; and the presence or absence of a bid security or a Bid-Securing Declaration, if one was required. The Bidders' representatives who are present shall be requested to sign the record. The omission of a Bidder's signature on the record shall not invalidate the contents and effect of the record. A copy of the record shall be distributed to all Bidders who submitted Bids on time, and posted online when electronic bidding is permitted.

27.7 At the end of the evaluation of the Technical Bids, the Employer will invite bidders who have submitted substantially responsive Technical Bids and who have been determined as being qualified for award to attend the opening of the Price Bids. The date, time, and location of the opening of Price Bids will be advised in writing by the Employer. Bidders shall be given reasonable notice of the opening of Price Bids.

27.8 The Employer will notify Bidders in writing who have been rejected on the grounds of their Technical Bids being substantially nonresponsive to the requirements of the Bidding Document and return their Price Bids unopened.

27.9 The Employer shall conduct the opening of Price Bids of all Bidders who submitted substantially responsive Technical Bids, in the presence of Bidders` representatives who choose to attend at the address, on the date, and time specified by the Employer. The Bidder's representatives who are present shall be requested to sign a register evidencing their attendance.

27.10 All envelopes containing Price Bids shall be opened one at a time and the following read out and recorded:

(a) the name of the Bidder;

(b) whether there is a modification or substitution;

(c) the Bid Prices, including any discounts and alternative offers; and

(d) any other details as the Employer may consider appropriate.

Only Price Bids, discounts, and alternative offers read out and recorded during the opening of Price Bids shall be considered for evaluation. Unless otherwise specified in the BDS, all pages of the Letter of Price Bid and Price Schedules are to be initialed by at least three representatives of the Employer attending bid the opening.No Bid shall be rejected at the opening of Price Bids.

27.11 The Employer shall prepare a record of the opening of Price Bids that shall include, as a minimum: the name of the Bidder, the Bid Price (per lot if

applicable), any discounts, and alternative offers. The Bidders' representatives who are present shall be requested to sign the record. The omission of a Bidder's signature on the record shall not invalidate the contents and effect of the record. A copy of the record shall be distributed to all Bidderswho submitted Bids on time, and posted online when electronic bidding is permitted.

E. Evaluation and Comparison of Bids

28. Confidentiality

28.1 Information relating to the evaluation of Bids and recommendation of contract award, shall not be disclosed to Bidders or any other persons not officially concerned with such process until publication of Contract award.

28.2 Any attempt by a Bidder to influence the Employer in the evaluation of the Bids or Contract award decisions may result in the rejection of its Bid.

28.3 Notwithstanding ITB 28.2, from the time of bid opening to the time of Contract award, if any Bidder wishes to contact the Employer on any matter related to the bidding process, it should do so in writing.

29. Clarification of Bids

29.1 To assist in the examination, evaluation, and comparison of the Technical and Price Bids, and qualification of the Bidders, the Employer may, at its discretion, ask any Bidder for a clarification of its Bid. Any clarification submitted by a Bidder that is not in response to a request by the Employer shall not be considered. The Employer's request for clarification and the response shall be in writing. No change in the substance of the Technical Bid or prices in the Price Bid shall be sought, offered, or permitted, except to confirm the correction of arithmetic errors discovered by the Employer in the evaluation of the Bids, in accordance with ITB 36.

29.2 If a Bidder does not provide clarifications of its Bid by the date and time set in the Employer's request for clarification, its Bid may be rejected.

30. Deviations, Reservations, and Omissions

30.1 During the evaluation of Bids, the following definitions apply:

(a) "Deviation" is a departure from the requirements specified in the Bidding Document;

(b) "Reservation" is the setting of limiting conditions or withholding from complete acceptance of the requirements specified in the Bidding Document; and

(c) "Omission" is the failure to submit part or all of the information or documentation required in the Bidding Document.

31. Examination of Technical Bids

31.1 The Employer shall examine the Technical Bid to confirm that all documents and technical documentation requested in ITB 11.2 have been provided, and to determine the completeness of each document submitted. If any of these documents or information is missing, the Bid may be rejected.

31.2 The Employer shall confirm that the following documents and information have been provided in the Technical Bid. If any of these documents or information is missing, the offer shall be rejected.

(a) Letter of Technical Bid;

(b) written confirmation of authorization to commit the Bidder;

(c) Bid Security or Bid-Securing Declaration, if applicable; and

(d) Technical Proposal in accordance with ITB 17.

32. Responsiveness of Technical Bid

32.1 The Employer's determination of a bid's responsiveness is to be based on the contents of the Bid itself, as defined in ITB11.

32.2 A substantially responsive Technical Bid is one that meets the requirements of the Bidding Document without material deviation, reservation, or omission. A material deviation, reservation, or omission is one that,

(a) if accepted, would:

(i) affect in any substantial way the scope, quality, or performance of the plant and services specified in the Contract; or

(ii) limit in any substantial way, inconsistent with the Bidding Document, the Employer's rights or the Bidder's obligations under the proposed Contract; or

(b) if rectified, would unfairly affect the competitive position of other Bidders presenting substantially responsive Bids.

32.3 The Employer shall examine the technical aspects of the Bid submitted in accordance with ITB 17, Technical Proposal, in particular to confirm that all requirements of Section 6 (Employer's Requirements) have been met without any material deviation, reservation, or omission.

32.4 If a Bid is not substantially responsive to the requirements of the Bidding Document, it shall be rejected by the Employer and may not subsequently be made responsive by correction of the material deviation, reservation, or omission.

33. Nonmaterial Nonconformities

33.1 Provided that a Bid is substantially responsive, the Employer may waive any non conformities in the Bid that do not constitute a material deviation, reservation, or omission.

33.2 Provided that a Bid is substantially responsive, the Employer may request that the Bidder submit the necessary information or documentation, within a reasonable period of time, to rectify nonmaterial nonconformities in the Bid related to documentation requirements. Requesting information or documentation on such nonconformities shall not be related to any aspect of the Price Bid. Failure of the Bidder to comply with the request may result in the rejection of its Bid.

33.3 Provided that a Bid is substantially responsive, the Employer shall rectify quantifiable nonmaterial nonconformities related to the Bid Price. To this effect, the Bid Price shall be adjusted, for comparison purposes only, to reflect the price of a missing or nonconforming item or component. The adjustment shall be made using the method indicated in Section 3 (Evaluation and Qualification Criteria).

34. Detailed Evaluation of Technical Bids

34.1 The Employer will carry out a detailed technical evaluation of the Bids not previously rejected as being substantially nonresponsive, to determine whether the technical aspects are in compliance with the Bidding Document. The Bid that does not meet minimum acceptable standards of completeness, consistency, and detail, and the specified minimum and/or maximum requirements for specified functional guarantees, will be treated as nonresponsive and hence rejected. To reach such a determination, the Employer will examine and compare the technical aspects of the bids on the basis of the information supplied by the Bidders, taking into account the following:

(a) overall completeness and compliance with the Employer's Requirements; deviations from the Employer's Requirements; conformity of the plant and services offered with specified performance criteria; suitability of the plant and services offered in relation to the environmental and climatic conditions prevailing at the site; and quality, function and operation of any process control concept included in the Bid. The Bid that does not meet minimum and/or maximum acceptable standards of completeness, consistency, and detail will be rejected for non responsiveness;

(b) type, quantity, and long-term availability of mandatory and recommended spare parts and maintenance services; and

(c) other relevant factors, if any, listed in Section 3 (Evaluation and Qualification Criteria).

34.2 Where alternative technical solutions have been allowed in accordance with ITB 13, and offered by the Bidder, the Employer will make a similar evaluation of the alternatives. Where alternatives have not been allowed but have been offered, they shall be ignored.

35. Eligibility and Qualification of the Bidder

35.1 The Employer shall determine to its satisfaction during the evaluation of Technical Bids whether a Biddermeets the eligibility and qualifying criteria specified in Section 3 (Evaluation and Qualification Criteria).

35.2 The determination shall be based upon an examination of the documentary evidence of the Bidder's qualifications submitted by the Bidder, pursuant to ITB 15.Unless permitted in the BDS, the determination shall not take into consideration the qualifications of other firms such as the Bidder's subsidiaries, parent entities, affiliates, subcontractors (other than Specialist Subcontractors if permitted in the bidding document), or any other firm(s) different from the Bidder.

35.3 An affirmative determination shall be a prerequisite for the opening and evaluation of a Bidder's Price Bid. The Employer reserves the right to reject the bid of any bidder found to be in circumstances described in GCC 42.2.1(a). A negative determination shall result into the disqualification of the Bid, in which event the Employer shall return the unopened Price Bid to the Bidder.

35.4 The capabilities of the manufacturers and subcontractors proposed in its Bid for the major items of plant and services to be used by a Bidder will also be evaluated for acceptability in accordance with Section 3 (Evaluation and Qualification Criteria). Their participation should be confirmed with a letter of intent between the parties, as needed. Should a manufacturer or subcontractor be determined to be unacceptable, the Bid will not be rejected, but the Bidder will be required to propose, without changing its bid price, an acceptable substitute manufacturer or subcontractor meeting the minimum technical specifications stated in Section 6 (Employer's Requirements). If a Bidder does not provide an acceptable substitute manufacturer or subcontractor by the date and time set in the Employer's request for substitution of manufacturer or subcontractor, its Bid may be rejected.

35.5 Prior to signing the Contract, the corresponding Appendix to the Contract Agreement shall be completed, listing the approved manufacturers or subcontractors for each item concerned.

36. Correction of Arithmetical

36.1 During the evaluation of Price Bids, the Employer shall correct arithmetical

Errors

errors on the following basis:

(a) where there are errors between the total of the amounts given under the column for the price breakdown and the amount given under the Total Price, the amounts given under the column for the price breakdown shall prevail and the Total Price will be corrected accordingly;

(b) where there are errors between the total of the amounts of Schedule Nos. 1 to 4 and the amount given in Schedule No. 5 (Grand Summary), the total of the amounts of Schedule Nos. 1 to 4 shall prevail and the Schedule No. 5 (Grand Summary) will be corrected accordingly;

(c) if there is a discrepancy between the grand total price given in Schedule No. 5 (Grand Summary) and the bid amount in item (c) of the Letter of Price Bid, the grand total price given in Schedule No. 5 (Grand Summary) will prevail and the bid amount in item (c) of the Letter of Price Bid will be corrected; and

(d) if there is a discrepancy between words and figures, the amount in words shall prevail, unless the amount expressed in words is related to an arithmetical error, in which case the amount in figures shall prevail subject to (a), (b), and (c) above.

36.2 If the Bidder that submitted the lowest evaluated Bid does not accept the correction of errors, its Bid shall be disqualified and its bid security may be forfeited or its Bid-Securing Declaration executed.

37. Conversion to Single Currency

37.1 For evaluation and comparison purposes, the currency(ies) of the Bid shall be converted into a single currency as specified in the BDS.

38. Domestic Preference

38.1 Unless otherwise specified in the BDS, domestic preference shall not apply.

39. Evaluation and Comparison of Price Bids

39.1 The Employer shall use the criteria and methodologies listed in this clause. No other evaluation criteria or methodologies shall be permitted.

39.2 I. To evaluate a Price Bid, the Employer shall consider the following:

(a) the bid price, excluding provisional sums and the provision, if any, for contingencies in the Price Schedules;

(b) price adjustment for correction of arithmetical errors in accordance with ITB 36.1;

(c) price adjustment due to discounts offered in accordance with ITB 18.7;

(d) price adjustment due to quantifiable nonmaterial nonconformities in accordance with ITB 33.3;

(e) converting the amount resulting from applying (a) to (c) above, if relevant, to a single currency in accordance with ITB 37;

(f) assessment whether the bid is abnormally low in accordance with ITB 40; and

(g) the evaluation factors indicated in Section 3 (Evaluation and Qualification Criteria).

II. The Employer's evaluation of a Bid will exclude and not take into account,

(a) in the case of Plant and Mandatory Spare Parts (Schedule No. 1) supplied from abroad, all taxes and duties, applicable in the Employer's country and payable on the Plant and Mandatory Spare

Parts if the Contract is awarded to the Bidder; and

(b) in the case of Plant and Mandatory Spare Parts (Schedule No. 2) supplied from within the Employer's country, sales and other taxes, applicable in the Employer's country and payable on the Plant and Mandatory Spare Parts if the Contract is awarded to the Bidder.

39.3 If price adjustment is allowed in accordance with ITB 18.6, the estimated effect of the price adjustment provisions of the Conditions of Contract, applied over the period of execution of the Contract, shall not be taken into account in bid evaluation.

39.4 If this Bidding Document allows Bidders to quote separate prices for different lots (contracts), and the award to a single Bidder of multiple lots (contracts), the methodology to determine the lowest evaluated price of the lot (contract) combinations, including any discounts offered in the Letter of Price Bid, is specified in Section 3 (Evaluation and Qualification Criteria).

39.5 If the Bid, which results in the lowest Evaluated Bid Price, is seriously unbalanced or front loaded in the opinion of the Employer, the Employer may require the Bidder to produce detailed price analyses for any or all items of the Price Schedules, to demonstrate the internal consistency of those prices with the methods and time schedule proposed. After evaluation of the price analyses, taking into consideration the terms of payments, the Employer may require that the amount of the performance security be increased at the expense of the Bidder to a level sufficient to protect the Employer against financial loss in the event of default of the successful Bidder under the Contract.

39.6 The Employer shall compare all substantially responsive Bids to determine the lowest evaluated Bid, in accordance with ITB 39.2.

40. Abnormally Low Bids

40.1 An abnormally low bid is one where the bid price, in combination with other elements of the bid, appears to be so low that it raises concerns as to the capability of the Bidder to perform the contract for the offered bid price.

40.2 When the offered bid price appears to be abnormally low, the Employer shall undertake a three-step review process as follows:

(a) identify abnormally low costs and unit rates by comparing them with the engineer's estimates, other substantially responsive bids, or recently awarded similar contracts;

(b) clarify and analyze the bidder's resource inputs and pricing, including overheads, contingencies and profit margins; and

(c) decide whether to accept or reject the bid.

40.3 With regard to ITB 40.2 (b) above, the Employer will seek a written explanation from the bidder of the reasons for the offered bid price, including a detailed analysis of costs and unit prices, by reference to the scope, proposed methodology, schedule, and allocation of risks and responsibilities. This may also include information regarding the economy of the manufacturing process; the services to be provided, or the construction method to be used; the technical solutions to be adopted; and any exceptionally favorable conditions available to the bidder for the works, equipment or services proposed.

40.4 After examining the explanation given and the detailed price analyses presented by the bidder, the Employer may:

(a) accept the bid, if the evidence provided satisfactorily accounts for the low bid price and costs, in which case the bid is not considered abnormally low;

(b) accept the bid, but require that the amount of the performance security

be increased at the expense of the bidder to a level sufficient to protect the Employer against financial loss. The amount of the performance security shall generally be not more than 20% of the contract price; or

(c) reject the bid if the evidence provided does not satisfactorily account for the low bid price, and make a similar determination for the next ranked bid, if required.

41. Employer's Right to Accept Any Bid, and to Reject Any or All Bids

41.1 The Employer reserves the right to accept or reject any Bid, and to annul the bidding process and reject all Bids at any time prior to contract award, without thereby incurring any liability to Bidders. In case of annulment, all Bids submitted and specifically, bid securities, shall be promptly returned to the Bidders.

42. Notice of Intention for Award of Contract

42.1 If Standstill provisions apply as specified in the BDS, the standstill period shall be defined in the BDS to specify the duration subsequent to notification of intention for award of contract (before making the actual contract award) within which any unsuccessful bidder can challenge the proposed award.

F. Award of Contract

43. Award Criteria

43.1 The Employer shall award the Contract to the Bidder whose offer has been determined successful in line with ITB 34 to ITB 40 above to be the lowest evaluated Bid and is substantially responsive to the Bidding Document, provided further that the Bidder is determined to be eligible and qualified to perform the Contract satisfactorily.

44. Notification of Award

44.1 Prior to the expiration of the period of bid validity and upon expiry of the standstill period specified in ITB 42.1, or upon satisfactory resolution of a complaint filed within standstill period, if applicable, the Employer shall transmit the Notification of Award using the form included in Section 9 (Contract Forms) to the successful Bidder, in writing, that its Bid has been accepted. At the same time, the Employer shall also notify all other Bidders of the results of the bidding.

44.2 Unless standstill period applies, upon notification of award, unsuccessful Bidders may request in writing to the Employer for a debriefing seeking explanations on the grounds on which their Bids were not selected. The Employer shall promptly respond in writing and/or in a debriefing meeting to any unsuccessful Bidder who, after publication of contract award, requests a debriefing.

44.3 Until a formal contract is prepared and executed, the notification of award shall constitute a binding Contract.

44.4 Within 2 weeks of the award of contract or expiry of the standstill period, where such period applies, or, if a complaint has been filed within the standstill period, upon receipt of ADB's confirmation of satisfactory resolution of the complaint, the borrower shall publish in an English language newspaper or widely known and freely accessible website the results identifying the bid and lot or package numbers, as applicable and the following information:

(a) name of each Bidder who submitted a bid;

(b) bid prices as read out at bid opening;

(c) name and evaluated prices of each bid that was evaluated;

(d) name of Bidders whose Bids were rejected and the reasons for their rejection; and

(e) name of the winning Bidder, and the price it offered, as well as the duration and summary scope of the contract awarded.

45. Signing of Contract

45.1 Promptly after notification, the Employer shall send the successful Bidder the Contract Agreement.

45.2 Within 28 days of receipt of the Contract Agreement, the successful Bidder shall sign, date, and return it to the Employer.

46. Performance Security

46.1 Within 28 days of the receipt of notification of award from the Employer, the successful Bidder shall furnish the performance security in accordance with the conditions of contract, subject to ITB 39.5 and ITB 40.4, using for that purpose the Performance Security Form included in Section 9 (Contract Forms), or another form acceptable to the Employer. If the institution issuing the performance security is located outside the country of the employer, it shall have a correspondent financial institution located in the country of the employer to make it enforceable.

46.2 Failure of the successful Bidder to submit the abovementioned Performance Security or sign the Contract shall constitute sufficient grounds for the annulment of the award and forfeiture of the bid security or execution of the Bid-Securing Declaration. In that event, the Employer may award the Contract to the next lowest evaluated Bidder whose offer is substantially responsive and is determined by the Employer to be qualified to perform the Contract satisfactorily.

47. Bidding-Related Complaints

47.1 The procedures for dealing with Bidding-Related Complaints arising out of this bidding process are specified in the BDS.

Section 2: Bid Data Sheet

This section consists of provisions that are specific to each procurement and supplement the information or requirements included in Section 1 (Instructions to Bidders).

A. General

ITB 1.1	The number of the Invitation for Bids (IFB) is: SPIP-W-2 The Employer is: **Bangladesh Rural Electrification Board** (BREB) The name of the open competitive bidding (OCB) is: Design, Supply, Installation and Commissioning of SPV Pumping System in Rangpur PBS-2. The identification number of the OCB is: SPIP-W-2 The number and identification of lots (contracts) comprising this OCB is: N/A
ITB 2.1	The Borrower is: The People's Republic of Bangladesh The name of the Project is: Solar Photovoltaic Pumping for Agricultural Irrigation [ADB Loan No.: 2769-BAN, and Grant No.: 0583-BAN (EF) & 0584-BAN (EF)].

B. Contents of Bidding Documents

ITB 7.1	For **clarification purposes** only, the Employer's address is: Attention: Project Director, SPPAI Project Street Address: Nikunja-2, Khilkhet. Floor/Room number: 6th Floor, BREB Training Academy Building, Bangladesh Rural Electrification Board (BREB) City: Dhaka. ZIP Code: 1229. Country: Bangladesh. Telephone: +880-8900152 Facsimile number: N/A E-mail: sppaibreb@gmail.com
ITB 7.4	A Pre-Bid meeting will take place. If a Pre-Bid meeting will take place, date, time and place are as follows:

	Date: 17 October, 2019. Time: 11:00 Hours Bangladesh Standard Time (BST) [GMT + 6 hours]. Place: Brig Gen. Sabihuddin Ahmed Hall (Auditorium), 1st Floor, Head Office Building, BREB, Nikunja-2, Khilkhet, Dhaka-1229. Bangladesh. A site visit conducted by the Employer will not be organized. Bidders are advised to conduct site visit at their own responsibility. The Employer may arrange necessary permissions if requested by the Bidders. The costs and expenses associated with attending the pre-bid meeting and/or site visit shall be borne by the Potential Bidders.

C. Preparation of Bids

ITB 10.1	The language of the Bid is: English Any Translation shall be certified by a Notary public or any Government Authorized agency of the bidder country
ITB 11.2 (k)	The Bidder shall submit with its Technical Bid the following additional documents: 1. Manufacturer's authorization using the form provided in Section-4 for the following items: a) Solar PV Module b) Solar Pump Inverter c) Submersible Pump d) Submersible Motor 2. Valid ISO 9001:2008 or updated certificates of proposed manufacturers for a) Solar PV Module b) Solar Pump Inverter c) Submersible Pump d) Submersible Motor e) Motor and PV Cable f) Steel angle and pipes g) PVC Pipes and Strainers

	3. Type test reports for Solar PV Module, MPPT Pump Inverter, Submersible Pump, Submersible motor, Motor and PV Cables, Steel Angle and Pipes, PVC Pipes and Strainers as specified in the Specifications (Volume II: Employer's Requirements) shall be submitted along with the bid. Test Reports other than in English Language must be translated into English. All such Type test reports are to be supplied from an internationally recognized independent testing laboratory. 4. The Bidder will provide typical prototype drawings (single line diagrams, plans and layout) of a sample of one of the substation switchyard equipment, and building to fully describe the Bid and to demonstrate that the Bidder understands the requirements. 5. The Bidder shall provide technical literature (pamphlets, brochures, booklets, leaflets) of all plant, equipment, relays, instruments, meters and materials being supplied in the works to fully demonstrate the type and quality of all items and the national or international standards to which they will be manufactured. Catalogue/reference numbers in the technical literature shall clearly relate to items in the bid.
ITB 11.3 (d)	The Bidder shall submit with its Price Bid the following additional documents: N/A.
ITB 12.1	The units and rates in figures entered into the Price Schedules should be typewritten or if written by hand, must be in print form. Price Schedules not presented accordingly may be considered nonresponsive.
ITB 13.1	Alternative bids are not permitted.
ITB 13.2	Alternatives to the Time Schedule shall not be permitted.
ITB 13.4	Alternative technical solutions shall be permitted for the following parts of the plant and services: None.
ITB 16.1 (b)	The period following acceptance of Solar Pump Systems in accordance with provisions of the contract shall be 5 (Five) years.
ITB 18.1	Bidders shall quote for the entire plant and services on a single responsibility basis.
IT 18.4(a)(i)	The Incoterm for quoting plant to be supplied from abroad is: CIP, At the construction/installation sites under Rangpur PBS-2. Chittagong & Mongla sea ports and Benapole land port are the principal port of entry for material to Bangladesh.
ITB 18.6	The prices quoted by the Bidder shall be Fixed.
ITB 19.1	The currencies of the Bid shall be as follows: (a) The prices shall be quoted either in the currency of the Bidder's home country, or in any fully convertible currency/(ies). (b) A Bidder expecting to incur a portion of its expenditures in the performance of the Contract in more than one currency, and wishing to be paid accordingly, shall so indicate in the Schedule of Prices and the Letter of Price Bid. (c) If some of the contract expenditures related to Design, Installation and Other

	Services are to be incurred in the Employer's country, such expenditures shall be quoted in either foreign and/or local currency, depending upon the currency in which the costs are to be incurred. (d) Bidders may be required by the Employer to clarify their local and foreign currency requirements, and to substantiate that the amounts included in the Price Schedules are reasonable and responsive to ITB 18.1 in which case a detailed breakdown of its foreign currency requirements shall be provided by the Bidder. (e) During the performance of the contract, the foreign currency portions of the outstanding balance of the Contract Price may be adjusted by agreement between the Employer and the Contractor to reflect any changes in foreign currency requirements for the contract. Any such adjustment shall be effected by comparing the amounts quoted in the bid with the amounts already used in the Facilities and the Contractor's future needs for imported items.
ITB 20.1	The bid validity period shall be120 days.
ITB 21.1	Bids shall include a Bid Security issued by bank using the form included in Section 4 (Bidding Forms). The amount and currency of the Bid Security shall be **US$** 100,000 or BDT 8,500,000. **If a bidder submitted Bid Security which is issued by any foreign bank located outside employer's country, such bid security shall be endorsed by a correspondent bank registered in the Employer's country.** Any Bid not accompanied by a bid security in compliance with the above amount shall be rejected as non-responsive.
ITB 21.2	The ineligibility period will be : Not applicable
ITB 21.4	Subject to the succeeding sentences, any bid not accompanied by an irrevocable and callable bid security shall be rejected by the Employer as nonresponsive. If a Bidder submits a bid security that (i) deviates in form, amount, and/or period of validity, or (ii) does not provide sufficient identification of the Bidder (including, without limitation, failure to indicate the name of the Joint Venture or, where the Joint Venture has not yet been constituted, the names of all future Joint Venture Partners), the Employer shall request the Bidder to submit a compliant bid security within 14 days of receiving such a request. Failure to provide a compliant bid security within the prescribed period of receiving such a request shall cause the rejection of the Bid.
ITB 22.1	In addition to the original of the bid, the number of copies is: 02 (Two). In addition, the Bidder shall provide electronic copy of the entire Bid in PDF format in a CD/DVD. Bidder shall also provide, price schedules and technical specification of each product in MS Excel format separately for computing and comparison purpose to facilitate ease of evaluation. The CD/DVD shall be enclosed in the envelope containing the Price Proposal. In the event of any discrepancy between the original bid (Paper Based), Electronic copy and hard copy of bids, the original (Paper Based) bid shall prevail.
ITB 22.2	The written confirmation of authorization to sign on behalf of the Bidder shall consist of:

	An organizational document, board resolution or its equivalent, or power of attorney specifying the representative's authority to sign the Bid on behalf of, and to legally bind, the Bidder. If the Bidder is an intended or an existing Joint Venture, the power of attorney should be signed by all partners and specify the authority of the named representative of the Joint Venture to sign on behalf of, and legally bind, the intended or existing Joint Venture. If the Joint Venture has not yet been formed, also include evidence from all proposed Joint Venture partners of their intent to enter into a Joint Venture in the event of a contract award in accordance with ITB 11.2.
ITB 22.2	The Bidder shall submit an acceptable authorization within 14 (Fourteen) days.

D. Submission and Opening of Bids

ITB 23.1	Bidders shall not have the option of submitting their bids electronically.
ITB 23.1 (b)	If Bidders shall have the option of submitting their bids electronically, the electronic bidding submission procedures shall be: N/A
ITB 24.1	For **bid submission purposes** only, the Employer's address is Attention: Project Director, SPPAI Project Street Address: Nikunja-2, Khilkhet. Floor/Room number: Brig. Gen. Sabihuddin Ahmed Hall (Auditorium), 1st Floor, H/Q Building, Bangladesh Rural Electrification Board (BREB), City: Dhaka. ZIP Code: 1229. Country: Bangladesh. Telephone: +880-8900152 Facsimile number: N/A E-mail: sppaibreb@gmail.com **The deadline for bid submission is** Date: 06 November, 2019. Time: 11:00 Hours BST.
ITB 27.1	The bid opening of Technical Bids shall take place at Street Address: Nikunja-2, Khilkhet. Floor/Room number: Brig. Gen. Sabihuddin Ahmed Hall (Auditorium), 1st Floor, H/Q Building, Bangladesh Rural Electrification Board (BREB),

	City :Dhaka Country: Bangladesh. Date: 06 November, 2019. Time: 11:30 Hours BST.
ITB 27.1	Electronic bid opening procedure shall be as follows: N/A
ITB 27.5	The Letter of Technical Bid shall be initialed by all representatives of the Employer attending Technical Bid opening.
ITB 27.10	The Letter of Price Bid and Price Schedules shall be initialed by at least three representatives of the Employer attending the Price Bid opening.

E. Evaluation and Comparison of Bids

ITB 35.2	The qualifications of other firms such as the Bidder's subsidiaries, parent entities, affiliates, Subcontractors shall not be permitted.
ITB 37.1	The currency(ies) of the Bid shall be converted into a single currency as follows: The currency that shall be used for bid evaluation and comparison purposes to convert all bid prices expressed in various currencies into a single currency is: US Dollar. Source of exchange rate shall be: Bangladesh Bank. https://www.bb.org.bd/ The date for the exchange rate shall be: The date of opening of the technical Bid (i.e. 06 November, 2019).
ITB 38.1	Domestic preference shall not apply.
ITB 42.1	Standstill provisions shall not apply.

F. Award of Contract

ITB 47.1	The procedures for Bidding-Related Complaints are referenced in Appendix 7 of the Procurement Regulations for ADB Borrowers. The Bidder should submit its complaint following these procedures, in writing, to: Title position: Project Director, Solar Photovoltaic Pumping for Agricultural Irrigation Project. Employer: Bangladesh Rural Electrification Board (BREB). Country: Bangladesh E-mail: sppaibreb@gmail.com Fax: N/A

Section 3: Evaluation and Qualification Criteria

Table of Criteria

1. Evaluation 3-2

1.1 Technical Evaluation 3-2

1.2 Alternative Technical Solutions 3-2

1.3 Economic Evaluation 3-2

1.4 Multiple Contracts 3-4

2. Qualification 3-5

2.1 Eligibility 3-5
2.1.1 Nationality 3-5
2.1.2 Conflict of Interest 3-5
2.1.3 ADB Eligibility 3-5
2.1.4 Government-Owned Enterprise 3-5
2.1.5 United Nations Eligibility 3-5

2.2 Historical Contract Nonperformance 3-6

2.2.1 History of Nonperforming Contracts 3-6
2.2.2 Suspension Based on Execution of Bid-Securing Declaration 3-6
2.2.3 Pending Litigation and Arbitration 3-6

2.3 Financial Requirements 3-7
2.3.1 Historical Financial Performance 3-7
2.3.2 Average Annual Turnover 3-7
2.3.3 Financial Resources 3-8

2.4 Bidder's Experience 3-9
2.4.1 Contracts of SImilar Size and Nature 3-9
2.4.2 Experience in Key Activities 3-10

2.5 Subcontractors 3-11

1. Evaluation

1.1 Technical Evaluation

In addition to the criteria listed in ITB 34.1 (a)–(b), other relevant factors are as follows:

Evaluation of the Bidder's Technical Proposal will include an assessment of the Bidder's technical capacity to mobilize key equipment and personnel for the contract, consistent with its proposal regarding work methods, scheduling, and material sourcing in sufficient detail and fully in accordance with the requirements stipulated in Section 6 (Employer's Requirements). Noncompliance with equipment and personnel requirements described in Section 6 (Employer's Requirements) shall not normally be a ground for bid rejection and such noncompliance will be subject to clarification during bid evaluation and rectification prior to contract award.

1.2 Alternative Technical Solutions

Technical alternatives, if permitted under ITB 13.4, will be evaluated as follows:

Technical alternatives are not permitted.

1.3 Economic Evaluation

In addition to the criteria listed in ITB 39.2I (a)–(f), other relevant factors are as follows:

Adjustments in price that result from the procedures outlined below shall be added, for purposes of comparative evaluation only, to arrive at an "Evaluated Bid Price." Bid prices quoted by Bidders shall remain unaltered.

1.3.1 Quantifiable Deviations and Omissions

Pursuant to ITB 33.3, the cost of all quantifiable nonmaterial nonconformities or omissions from the contractual and commercial conditions shall be evaluated. The Employer will make its own assessment of the cost of any nonmaterial nonconformities and omissions for the purpose of ensuring fair comparison of Bids.

1.3.2 Time Schedule

Time to complete the plant and services from the effective date specified in Article 3 of the Contract Agreement for determining the time for completion of pre-commissioning activities is: 12 months No credit will be given for earlier completion.

Bids offering a completion date beyond the 12 months period shall be rejected.

1.3.3 Operation and Maintenance (O&M) Costs

The O&M cost factors for calculating the life cycle cost are as follows: Not applicable for the Economic Evaluation for award of contract for this package.

1.3.4 Functional Guarantees of the Facilities

The minimum and/or maximum requirements stated in the Specification for functional guarantees required in the Specification are:

Functional Guarantee	Minimum and/or maximum, as appropriate requirement
Rated Power Performance of Solar PV Module	Maximum power output degradation shall not be more than 3 % of its initial guaranteed power rating after 1 year.
Inverter input and output power capacity	Each category of Inverter input and output capacity must meet minimum of 100% of its input and output power capacity as specified in Section 6
Pump's rated delivery capacity	Each category of pump must meet at a minimum of 100% guaranteed rated flow capacity at guaranteed rated power at specific TDH as mentioned in Section 6.

For the purposes of evaluation, for each percentage point in performance or efficiency below the norm specified in the Specification but above the minimum acceptable levels also specified there, an adjustment of USD 45,000 or BDT 4,000,000 will be added to the bid price.

1.3.5 Work, Services, Facilities, etc., to Be Provided by the Employer

Not applicable for the Economic Evaluation for award of contract for this package

1.3.6 Specific Additional Criteria

The following additional criteria will be used in the evaluation:

1.3.7 Domestic Preference

Not Applicable.

1.4 Multiple Contracts

"If works are grouped in multiple contracts and pursuant to ITB 39.4, the Employer will evaluate and compare Bids on the basis of a contract, or a combination of contracts, or as a total of contracts to arrive at the least cost combination for the Employer by taking into account discounts offered by Bidders in case of award of multiple contracts.

If a Bidder as defined in ITB 4.1 submits several successful (lowest evaluated substantially responsive) bids, the evaluation will also include an assessment of the Bidder's capacity to meet the following aggregated requirements as presented in the bid:

- Average annual turnover,
- Financial resources,
- Equipment to be allocated, and
- Personnel to be fielded".

2. Qualification

2.1 Eligibility

Criteria	Compliance Requirements				Documents
Requirement	Single Entity	Joint Venture			Submission Requirements
		All Partners Combined	Each Partner	One Partner	
2.1.1 Nationality					
Nationality in accordance with ITB 4.2.	Must meet requirement	Must meet requirement	Must meet requirement	Not applicable	Forms ELI - 1; ELI - 2 with attachments
2.1.2 Conflict of Interest					
No conflicts of interest in accordance with ITB 4.3.	Must meet requirement	Must meet requirement	Must meet requirement	Not applicable	Letter of Technical Bid
2.1.3 ADB Eligibility					
Not having been declared ineligible by ADB, as described in ITB 4.4.	Must meet requirement	Must meet requirement	Must meet requirement	Not applicable	Letter of Technical Bid
2.1.4 Government-Owned Enterprise					
Bidder required to meet conditions of ITB 4.5.	Must meet requirement	Must meet requirement	Must meet requirement	Not applicable	Forms ELI - 1; ELI - 2 with attachments
2.1.5 United Nations Eligibility					
Not having been excluded by an act of compliance with a United Nations Security Council resolution in accordance with ITB 4.8.	Must meet requirement	Must meet requirement	Must meet requirement	Not applicable	Letter of Technical Bid

2.2 Historical Contract Nonperformance

2.2.1 History of Nonperforming Contracts

Criteria	Compliance Requirements				Documents
Requirement	Single Entity	Joint Venture			Submission Requirements
		All Partners Combined	Each Partner	One Partner	
Nonperformance of a contract[a] did not occur as a result of contractor default since 1 January 2016	Must meet requirement	Must meet requirement	Must meet requirement[b]	Not applicable	Form CON-1

2.2.2 Suspension Based on Execution of Bid-Securing Declaration

Criteria	Compliance Requirements				Documents
Requirement	Single Entity	Joint Venture			Submission Requirements
		All Partners Combined	Each Partner	One Partner	
Not under suspension based on execution of a Bid Securing Declaration pursuant to ITB 4.6.	Must meet requirement	Must meet requirement	Must meet requirement	Not applicable	Letter of Technical Bid

2.2.3 Pending Litigation and Arbitration

Pending litigation and arbitration criterion shall not apply.

2.3 Financial Situation

2.3.1 Historical Financial Performance

Criteria	Compliance Requirements				Documents
Requirement	Single Entity	Joint Venture			Submission Requirements
		All Partners Combined	Each Partner	One Partner	
Submission of audited financial statements or, if not required by the law of the Bidder's country, other financial statements acceptable to the Employer, for the last 3 (three) years to demonstrate the current soundness of the Bidder's financial position. As a minimum, the Bidder's net worth for the last year calculated as the difference between total assets and total liabilities should be positive.	Must meet requirement	Not applicable	Must meet requirement	Not applicable	Form FIN - 1 with attachments

2.3.2 Average Annual Turnover

Criteria	Compliance Requirements				Documents
Requirement	Single Entity	Joint Venture			Submission Requirements
		All Partners Combined	Each Partner	One Partner	
Minimum average annual turnover of US$ 5.00 (Five) Million calculated as total certified payments received for contracts in progress or completed, within the last 5 (five) years (best three years will be considered).	Must meet requirement	Must meet requirement	Must meet 25% of the requirement	Must meet 40 % of the requirement	Form FIN - 2

2.3.3 Financial Resources

Criteria	Compliance Requirements				Documents
Requirement	Single Entity	Joint Venture			Submission Requirements
		All Partners Combined	Each Partner	One Partner	
For Single Entities: The Bidder must demonstrate that its financial resources defined in FIN-3, less its financial obligations for its current contract commitments defined in FIN-4, meet or exceed the total requirement for the Subject Contract of US$ 1.3 (One point Three) Million.	Must meet requirement	Not applicable	Not applicable	Not applicable	Form FIN – 3 and Form FIN - 4
For Joint Ventures: (1) One partner must demonstrate that its financial resources defined in FIN-3, less its financial obligations for its own current contract commitments defined in FIN-4, meet or exceed its required share of US$ 0.52 (Zero Point Five Two) Million from the total requirement for the Subject Contract. AND	Not applicable	Not applicable	Not applicable	Must meet requirement	Form FIN – 3 and Form FIN - 4
(2) Each partner must demonstrate that its financial resources defined in FIN-3, less its financial obligations for its own current contract commitments defined in FIN-4, meet or exceed its required share of US$ 0.325 (Zero point Three Two Five) Million from the total requirement for the Subject Contract. AND	Not applicable	Not applicable	Must meet requirement	Not applicable	Form FIN – 3 and Form FIN - 4
(3) The Joint Venture must demonstrate that the combined financial resources of all partners defined in FIN-3, less all the partners' total financial obligations for the current contract commitments defined in FIN-4, meet or exceed the total requirement for the Subject Contract of US$ 1.3 (One point Three) Million.	Not applicable	Must meet requirement	Not applicable	Not applicable	Form FIN – 3 and Form FIN - 4

2.4 Bidder's Experience

2.4.1 Contracts of Similar Size and Nature

Criteria	Compliance Requirements				Documents
Requirement	Single Entity	Joint Venture			Submission Requirements
		All Partners Combined	Each Partner	One Partner	
Participation as a contractor, Joint Venture partner, or subcontractor, in at least three contracts that has been successfully or substantially completed within the last 10 (ten) years and that is similar to the proposed contract, where the value of the Bidder's participation exceeds $ 2.8 (two point eight) Million (cumulative value of maximum 3 contracts). The similarity of the Bidder's participation shall be based on: **Minimum 20kWp** or higher capacity Solar PV Grid-Tied or PV Off-Grid Power System or PV Pumping system.	Must meet requirement	Not applicable	Not applicable	Must meet requirement	Form EXP – 1 Completion and satisfactory operational certificate on the **User's letter head,** indicating the address, telephone, fax, email address, **employer's name** scope of work, date of completion of **work, contractor's** name and contract amount If documents are not in English, an English notarized version dully certified by certified translator should be provided.

2.4.2 Experience in Key Activities

2.4.2(a) Must be complied with by the Bidder. In case of a Joint Venture Bidder, at least one of the partners must meet the requirement in the key activity.

Table A

Criteria	Compliance Requirements		Documents
Requirement	**Single Entity**	**Joint Venture**	**Submission Requirements**
For the above or other contracts executed during the period stipulated in 2.4.1, a minimum experience in the following key activities:	Must meet requirement	Must meet requirement	Form EXP – 2
1. The bidder shall have successfully executed design, supply, installation, testing and commissioning of at least 10 nos. of 15HP or higher capacity solar pumping systems similar to Employer's Requirement, on turnkey basis in the last Five years. 2. To substantiate the above qualification, the bidder must submit certificate from clients (End user certificates) for all number of projects specified above and mentioning that they are in operation at least for 1 year.			

2.4.2(b) The Employer accepts any of the following activities to be subcontracted. They may be complied with by the Bidder or by its proposed specialist subcontractor.

Table B

Criteria	Compliance Requirements		Documents
Requirement	**Single Entity or its Specialist Subcontractors**	**Joint Venture or its Specialist Subcontractors**	**Submission Requirements**
	One must meet requirement	One must meet requirement	
NA	NA	NA	NA
NA	NA	NA	NA
NA	NA	NA	NA

2.5 Subcontractors

Subcontractors or Manufacturers for the following major items of plant and services must meet the following minimum qualification criteria, herein listed for a Subcontractor for that item. Failure to comply with this requirement will result in rejection of the Subcontractor but not the Bidder.

Item No.	Description of Item	Minimum Criteria to be met	Documents Submission Requirements
1	NA	NA	NA
2	NA	NA	NA
3	NA	NA	NA
4	NA	NA	NA
5	NA	NA	NA
7	NA	NA	NA

In the case of a Bidder who offers to supply and install major items of plant under the contract, which the Bidder did not manufacture or otherwise produce, the Bidder shall provide the Manufacturer's authorization, using the form provided in Section 4 (Bidding Forms), showing that the Bidder has been duly authorized by the Manufacturer or producer of the related plant and equipment or component to supply and install that item in the Employer's country. Failure to submit the Manufacturer's authorization at the first instance is considered a minor, nonmaterial omission and shall be subject to clarification. However, failure of the Bidder to submit the omitted authorization shall lead to rejection of the Subcontractor or Manufacturer of the item under evaluation in accordance with ITB 35.4.

Section 4: Bidding Forms

This section contains the forms to be completed by the Bidder and submitted as part of its Bid.

Table of Forms

Letter of TechnicalBid **4-2**

Country of Origin Declaration Form **4-5**

Letter of PriceBid **4-6**

Price Schedules **4-8**
- Schedule No. 1. Plant and Mandatory Spare Parts Supplied from Abroad 4-9
- Schedule No. 2. Plant and Mandatory Spare Parts Supplied from Within the Employer's Country 4-10
- Schedule No. 3. Design Services 4-19
- Schedule No. 4. Installation and Other Services 4-20
- Schedule No. 5. Grand Summary 4-22
- Schedule No. 6. Recommended Spare Parts 4-24

Tables of Adjustment Data **4-26**

Bid Security **4-26**

Bid-Securing Declaration **4-17**

Technical Proposal **4-28**
- Site Organization 4-29
- Method Statement 4-30
- Mobilization Schedule 4-31
- Construction Schedule 4-22
- Plant 4-23
- Personnel 4-24
  - Form PER – 1: Proposed Personnel 4-24
  - Form PER – 2: Resume of Proposed Personnel 4-25
- Equipment 4-26
- Proposed Subcontractors/Manufactureres for Major Items of Plant and Services 4-27
- Manufacturer's Authorization 4-28
- Affiliate Company Guarantee 4-29
- Time Schedule 4-30
- Functional Guarantee of the Proposed Facilities 4-31

Bidders Qualification **4-32**
- Form ELI - 1: Bidder's Information Sheet 4-33
- Form ELI - 2: Joint Venture Information Sheet 4-34
- Form CON - 1: Historical Contract Nonperformance 4-35
- Form FIN - 1: Historical Financial Performance 4-36
- Form FIN - 2: Average Annual Turnover 4-37
- Form FIN – 3: Availability ofFinancial Resources 4-38
- Form FIN- 4: Financial Requirements for Current Contract Commitments 4-39
- Form FIN- 5: Self-Assessment Tool for Bidder's Compliance to Financial Resources 4-40
- Form EXP – 1: Contracts of Similar Size and Nature 4-41
- Form EXP – 2: Experience in Key Activities 4-42
- Form EXP – 3: Subcontractors 4-43

Letter of Technical Bid

-- Note –

The Bidder must accomplish the Letter of Technical Bid on its letterhead clearly showing the Bidder's complete name and address.

Date: .....

OCB No.: .....

Invitation for Bid No.: .....

To: [*insert complete name of the Employer*]

We, the undersigned, declare that:

(a) We have examined and have no reservations to the Bidding Documents, including Addenda issued in accordance with Instructions to Bidders (ITB) 8.

(b) We offer to design, manufacture, test, deliver, install, pre-commission, and commission in conformity with the Bidding Document the following Plant and Services:[*insert narrative*]

(c) Our Bid consisting of the Technical Bid and the Price Bid shall be valid for a period of [*insert bid validity period as specified in ITB 20.1 of the BDS*] days from the date fixed for the bid submission deadline in accordance with the Bidding Documents, and it shall remain binding upon us and may be accepted at any time before the expiration of that period.

(d) We, including any Subcontractors or Manufacturers for any part of the Contract, have or will have nationalities from eligible countries, in accordance with ITB4.2.

(e) We, including any Subcontractors or Suppliers for any part of the Contract, do not have any conflict of interest in accordance with ITB 4.3.

(f) We are not participating, as a Bidder, either individually or as partner in a Joint Venture, in more than one bid in this bidding process in accordance with ITB 4.3(e), other than alternative offers submitted in accordance with ITB 13.

(g) Our firm, Joint Venture partners, associates, parent company, its affiliates or subsidiaries, including any Subcontractors or Suppliers for any part of the contract, are not subject to, or not controlled by any entity or individual that is subject to, a temporary suspension or a debarment imposed by the Asian Development Bank or a debarment imposed by the Asian Development Bank in accordance with the Agreement for Mutual Enforcement of Debarment Decisions between the Asian Development Bank and other development banks.[1]

(h) Our firm, Joint Venture partners, associates, parent company, affiliates or subsidiaries, including any Subcontractors or Suppliers for any part of the Contract, are not, or have

[1]These institutions include African Development Bank, European Bank for Reconstruction and Development (EBRD), Inter-American Development Bank (IADB), and the World Bank Group. According to paragraph 9 of the Agreement, other international financial institutions may join upon the consent of all Participating Institutions and signature of a Letter of Adherence by the international financial institution substantially in the form provided (Annex B to the Agreement). Upon adherence, such international financial institution shall become a Participating Institution for purposes of the Agreement. Bidders are advised to check www.adb.org/integrity for updates.

never been, temporarily suspended, debarred, declared ineligible, or blacklisted by the Employer's country, any international organization, and other donor agency.

If so debarred, declared ineligible, temporarily suspended, or blacklisted, please state details (as applicable to each Joint Venture partner, associate, parent company, affiliate, subsidiaries, Subcontractors, and/or Suppliers):

(i) Name of Institution: _____

(ii) Period of debarment, ineligibility, or blacklisting [*start and end date*]: _____

(iii) Reason for the debarment, ineligibility, or blacklisting: _____

(i) Our firm's, Joint Venture partners, associates, parent company's affiliates or subsidiaries, including any Subcontractors or Suppliers key officers and directors have not been [*charged or convicted*] of any criminal offense (including felonies and misdemeanors) or infractions and/or violations of ordinance which carry the penalty of imprisonment.

If so charged or convicted, please state details:

(i) Nature of the offense/violation: _____

(ii) Court and/or area of jurisdiction: _____

(iii) Resolution [*i.e. dismissed, settled, or convicted; duration of penalty*]: _____

(iv)Other relevant details [*please specify*]: _____

(j) We understand that it is our obligation to notify ADB should our firm, Joint Venture partners, associates, parent company, affiliates or subsidiaries, including any Subcontractors or Suppliers, be temporarily suspended, debarred or become ineligible to work with ADB or any other MDBs, the Employer's country, international organizations, and other donor agencies, or any of our key officers and directors be charged or convicted of any criminal offense or infractions/violations of ordinance which carry the penalty of imprisonment.

(k) Our firm, Joint Venture partners, associates, parent company, affiliates or subsidiaries, including any Subcontractors or Suppliers, are not from a country which is prohibited to export goods to or receive any payments from the Employer's country by an act of compliance with a decision of the United Nations Security Council taken under Chapter VII of the Charter of the United Nations.

(l) [We are not a government-owned enterprise] / [We are a government-owned enterprise but meet the requirements of ITB4.5].[2]

(m) We have not been suspended nor declared ineligible by the Employer based on execution of a Bid-Securing Declaration in accordance with ITB 4.6.

(n) We agree to permit ADB or its representative to inspect our accounts and records and other documents relating to the bid submission and to have them audited by auditors appointed by ADB.

(o) If our Bid is accepted, we commit to mobilizing key equipment and personnel in accordance with the requirements set forth in Section 6 (Employer's Requirements) and our technical proposal, or as otherwise agreed with the Employer.

[2] Use one of the two options as appropriate.

(p) We understand that any misrepresentation that knowingly or recklessly misleads, or attempts to mislead may lead to the automatic rejection of the Bid or cancellation of the contract, if awarded, and may result in remedial actions, in accordance with ADB's Anticorruption Policy (1998, as amended to date) and Integrity Principles and Guidelines (2015, as amended from time to time).

Name .....

In the capacity of .....

Signed .....
.....

Duly authorized to sign the Bid for and on behalf of .....

Date .....
.....

Country of Origin Declaration Form

Name of Bidder _____ IFB Number _____ Page ___ of ___

Item	Description	Country of Origin

Letter of Price Bid

-- Note –

The Bidder must accomplish the Letter of Price Bid on its letter head clearly showing the Bidder's complete name and address.

Date: .....

OCB No.: .....

Invitation for Bid No.: .....

To:[*insert complete name of the Employer*]

We, the undersigned, declare that:

(a) We have examined and have no reservations to the Bidding Document, including Addenda issued in accordance with Instructions to Bidders (ITB) 8.

(b) We offer to design, manufacture, test, deliver, install, pre-commission, and commission in conformity with the Bidding Document the following Plant and Services:[*insert narrative*]

(c) The total price of our Bid, excluding any discounts offered in item (d) below is the sum of

[*amount of foreign currency in words*], [*amount in figures*], and [*amount of local currency in words*], [*amount in figures*]*The total bid price from the Grand Summary (Schedule No. 5) both for i. Grand Total Price inclusive of AIT and VAT & ii. Grand Total price exclusive of AIT and VAT should be entered by the Bidder inside this box. Absence of the total price in the Letter of Price Bid may result in the rejection of the bid.*

(d) [*amount of foreign currency in words*], [*amount in figures*], and [*amount of local currency in words*], he discounts offered and the methodology for their application are as follows: [*insert discounts and methodology for their application if any*]

(e) Our Bid shall be valid for a period of [*insert bid validity period as specified in ITB 20.1 of the BDS*] days from the date fixed for the submission deadline in accordance with the Bidding Documents, and it shall remain binding upon us and may be accepted at any time before the expiration of that period.

(f) If our Bid is accepted, we commit to obtain a performance security in accordance with the Bidding Document.

(g) We have paid, or will pay the following commissions, gratuities, or fees with respect to the bidding process or execution of the Contract: [3]

[3] If none has been paid or is to be paid, indicate "None."

Name of Recipient	Address	Reason	Amount
.....	.....	.....	.....
.....	.....	.....	.....

(h) We understand that this bid, together with your written acceptance thereof included in your notification of award, shall constitute a binding contract between us, until a formal contract is prepared and executed.

(i) We understand that you are not bound to accept the lowest evaluated bid or any other bid that you may receive.

(j) We agree to permit ADB or its representative to inspect our accounts and records and other documents relating to the bid submission and to have them audited by auditors appointed by ADB.

Name .....

In the capacity of .....

Signed .....
.....

Duly authorized to sign the Bid for and on behalf of .....

Date.....
.....

Price Schedules

PREAMBLE

General

1. The Price Schedules are divided into separate Schedules as follows:

   Schedule No. 1: Plant and Mandatory Spare Parts Supplied from Abroad

   Schedule No. 2: Plant and Mandatory Spare Parts Supplied from within the Employer's Country

   Schedule No. 3: Design Services

   Schedule No. 4: Installation and Other Services

   Schedule No. 5: Grand Summary

   Schedule No. 6: Recommended Spare Parts

2. The Schedules do not generally give a full description of the plant to be supplied and the services to be performed under each item. Bidders shall be deemed to have read the Employer's Requirements and other sections of the Bidding Document and reviewed the Drawings to ascertain the full scope of the requirements included in each item prior to filling in the rates and prices. The entered rates and prices shall be deemed to cover the full scope as aforesaid, including overheads and profit.

3. If Bidders are unclear or uncertain as to the scope of any item, they shall seek clarification in accordance with ITB 7 prior to submitting their bid.

Pricing

4. The units and rates in figures entered into the Price Schedules should be typewritten or if written by hand, must be in print form. Price Schedules not presented accordingly may be considered nonresponsive. Any alterations necessary due to errors, etc., shall be initialed by the Bidder.

   As specified in the Bid Data Sheet and Special Conditions of Contract, prices shall be fixed and firm for the duration of the Contract, or prices shall be subject to adjustment in accordance with the corresponding Appendix (Price Adjustment) to the Contract Agreement.

5. Bid prices shall be quoted in the manner indicated and in the currencies specified in the Instructions to Bidders in the Bidding Document.

   For each item, Bidders shall complete each appropriate column in the respective Schedules, giving the price breakdown as indicated in the Schedules.

   Prices given in the Schedules against each item shall be for the scope covered by that item as detailed in Section 6 (Employer's Requirements) or elsewhere in the Bidding Document.

6. Payments will be made to the Contractor in the currency or currencies indicated under each respective item.

7. When requested by the Employer for the purposes of making payments or part payments, valuing variations or evaluating claims, or for such other purposes as the Employer may reasonably require, the Contractor shall provide the Employer with a breakdown of any composite or lump sum items included in the Schedules.

Schedules of Rates and Prices

Schedule No. 1: Plant and Mandatory Spare Parts Supplied from Abroad

Item	Description	Country of Origin	Quantity	Unit Price[a]		Total Price[a]	Taxes and Duties
				Foreign Currency	CIP	Foreign Currency	Local Currency
1	2	3	4	5	6	7 = 4 x 6	8
1A. Solar Photovoltaic Pumping System, 2.2kW - 100 Sets							
1A-1.	Solar PV Module (Min. 300Wp)		Min. 430kWp				
1A-2.	Min. 2.2kW Pump Inverter		100 Nos				
1A-3.	PV Combiner Box with String Fuse and PV Disconnect Circuit Breaker		100 Set				
1A-4.	Circuit Breaker box with AC Circuit Breaker for Motor Protection		100 Set				
1A-5.	2.2kW Submersible Pump		100 Nos				
1A-6.	2.2kW Submersible Motor		100 Nos				
1A-7.	6 inch Housing Pipe (PVC)		5000 ft				
1A-8.	6 inch Strainer Pipe (PVC)		3000 ft				
1A-9.	3 inch Delivery Pipe (MS)		5000 ft				
1A-10.	6 inch Buried Pipe line		60,000 ft				
1A-11.	Min. 1.5mm^2 PV Cable (UV Resistant)		6,500 ft				
1A-12.	Min. 1.5 mm^2 Submersible Motor Cable		6,500 ft				
1A-13.	PV Module Mounting Structure (Galvanized Steel or Aluminium)		100 Set				
1A-14.	Pump Inverter		100 Set				

Item	Description	Country of Origin	Quantity	Unit Price[a]		Total Price[a]	Taxes and Duties
				Foreign Currency	CIP	Foreign Currency	Local Currency
1	2	3	4	5	6	7 = 4 x 6	8
	and Pump Housing						
1B. Solar Photovoltaic Pumping System, 4.0kW - 100 Sets							
1B-1.	Solar PV Module (Min. 300Wp)		Min. 760 kWp				
1B-2.	Min. 4.0kW Pump Inverter		100 Nos				
1B-3.	PV Combiner Box with String Fuse and PV Disconnect Circuit Breaker		100 Set				
1B-4.	Circuit Breaker box with AC Circuit Breaker for Motor Protection		100 Set				
1B-5.	4.0kW Submersible Pump		100 Nos				
1B-6.	4.0kW Submersible Motor		100 Nos				
1B-7.	6 inch Housing Pipe (PVC)		5,000 ft				
1B-8.	6 inch Strainer Pipe (PVC)		3,000 ft				
1B-9.	3 inch Delivery Pipe (MS)		5,000 ft				
1B-10.	6 inch Buried Pipe line		80,000 ft				
1B-11.	Min. 1.5mm^2 PV Cable (UV Resistant)		13,500 ft				
1B-12.	Min. 1.5 mm^2 Submersible Motor Cable		6,500 ft				
1B-13.	PV Module Mounting Structure (Galvanized Steel or Aluminium)		100 Set				
1B-14.	Pump Inverter and Pump Housing		100 Set				

Item	Description	Country of Origin	Quantity	Unit Price[a]		Total Price[a]	Taxes and Duties
				Foreign Currency	CIP	Foreign Currency	Local Currency
1	2	3	4	5	6	7 = 4 x 6	8
1C. Solar Photovoltaic Pumping System, 5.5kW - 90 Sets							
1C-1.	Solar PV Module (Min. 300Wp)		Min. 972 kWp				
1C-2.	Min. 5.5kW Pump Inverter		90 Nos				
1C-3.	PV Combiner Box with String Fuse and PV Disconnect Circuit Breaker		90 Set				
1C-4.	Circuit Breaker box with AC Circuit Breaker for Motor Protection		90 Set				
1C-5.	5.5kW Submersible Pump		90 Nos				
1C-6.	5.5kW Submersible Motor		90 Nos				
1C-7.	8 inch Housing Pipe (PVC)		6,300 ft				
1C-8.	8 inch Strainer Pipe (PVC)		2,700 ft				
1C-9.	5 inch Delivery Pipe (MS)		4,500 ft				
1C-10.	8 inch Buried Pipe line		126,000 ft				
1C-11.	Min. 2.5mm^2 PV Cable (UV Resistant)		13,050 ft				
1C-12.	Min. 2.5 mm^2 Submersible Motor Cable		5,850 ft				
1C-13.	PV Module Mounting Structure (Galvanized Steel or Aluminium)		90 Set				
1C-14.	Pump Inverter and Pump Housing		90 Set				
1D. Solar Photovoltaic Pumping System, 7.5kW - 45 Sets							
1D-1.	Solar PV Module		Min. 630				

Item	Description	Country of Origin	Quantity	Unit Price[a]		Total Price[a]	Taxes and Duties
				Foreign Currency	CIP	Foreign Currency	Local Currency
1	2	3	4	5	6	7 = 4 x 6	8
	(Min. 300Wp)		kWp				
1D-2.	Min. 7.5kW Pump Inverter		45 Nos				
1D-3.	PV Combiner Box with String Fuse and PV Disconnect Circuit Breaker		45 Nos				
1D-4.	Circuit Breaker box with AC Circuit Breaker for Motor Protection		45 Nos				
1D-5.	7.5kW Submersible Pump		45 Nos				
1D-6.	7.5kW Submersible Motor		45 Nos				
1D-7.	10 inch Housing Pipe (PVC)		3,600 ft				
1D-8.	10 inch Strainer Pipe (PVC)		1,350 ft				
1D-9.	6 inch Delivery Pipe (MS)		2250 ft				
1D-10.	8 inch Buried Pipe line		72,000 ft				
1D-11.	Min. 4.0 mm^2 PV Cable (UV Resistant)		11,025 ft				
1D-12.	Min. 4.0 mm^2 Submersible Motor Cable		2,925 ft				
1D-13.	PV Module Mounting Structure (Galvanized Steel or Aluminium)		45 Set				
1D-14.	Pump Inverter and Pump Housing		45 Set				
1E. Solar Photovoltaic Pumping System, 11.0 kW - 15 Sets							
1E-1.	Solar PV Module (Min. 300Wp)		Min. 307.5 kWp				
1E-2.	Min. 10.0 kW		15 Nos				

Item	Description	Country of Origin	Quantity	Unit Price[a]		Total Price[a]	Taxes and Duties
				Foreign Currency	CIP	Foreign Currency	Local Currency
1	2	3	4	5	6	7 = 4 x 6	8
	Pump Inverter						
1E-3.	PV Combiner Box with String Fuse and PV Disconnect Circuit Breaker		15 Set				
1E-4.	Circuit Breaker box with AC Circuit Breaker for Motor Protection		15 set				
1E-5.	10.0 kW Submersible Pump		15 Nos				
1E-6.	10.0 kW Submersible Motor		15 Nos				
1E-7.	10 inch Housing Pipe (PVC)		1,350 ft				
1E-8.	10 inch Strainer Pipe (PVC)		450 ft				
1E-9.	6 inch Delivery Pipe (MS)		750 ft				
1E-10.	8 inch Buried Pipe line		30,000 ft				
1E-11.	Min. 4.0 mm^2 PV Cable (UV Resistant)		3,500 ft				
1E-12.	Min. 6.0 mm^2 Submersible Motor Cable		975 ft				
1E-13.	PV Module Mounting Structure (Galvanized Steel or Aluminium)		15 Set				
1E-14.	Pump Inverter and Pump Housing		15 Set				
	TOTAL Column 7 to be carried forward to Schedule No. 5: Grand Summary						

Name of Bidder _____

Signature of Bidder _____

[a] *Specify currencies in accordance with ITB 19.1 of the BDS.Create additional columns for foreign currencies if so required.*

Schedule No. 2: Plant and Mandatory Spare Parts Supplied from Within the Employer's Country

Item	Description	Quantity	Unit Price[a]		Total EXW Price[a]	Sales and other taxes
			Local Currency	EXW Price[b]		
1	2	3	4	5	6 = 3 x 5	7
2A. Solar Photovoltaic Pumping System, 2.2kW - 100 Sets						
2A-1.	Solar PV Module (Min. 300Wp)	Min. 430kWp				
2A-2.	Min. 2.2kW Pump Inverter	100 Nos				
2A-3.	PV Combiner Box with String Fuse and PV Disconnect Circuit Breaker	100 Set				
2A-4.	Circuit Breaker box with AC Circuit Breaker for Motor Protection	100 Set				
2A-5.	2.2kW Submersible Pump	100 Nos				
2A-6.	2.2kW Submersible Motor	100 Nos				
2A-7.	6 inch Housing Pipe (PVC)	5,000 ft				
2A-8.	6 inch Strainer Pipe (PVC)	3,000 ft				
2A-9.	3 inch Delivery Pipe (MS)	5,000 ft				
2A-10.	6 inch Buried Pipe line	60,000 ft				
2A-11.	Min. 1.5mm^2 PV Cable (UV Resistant)	6,500 ft				
2A-12.	Min. 1.5 mm^2 Submersible Motor Cable	6,500 ft				
2A-13.	PV Module Mounting Structure (Galvanized Steel or Aluminium)	100 Set				
2A-14.	Pump Inverter and Pump Housing	100 Set				
2B. Solar Photovoltaic Pumping System, 4.0kW - 100 Sets						
2B-1.	Solar PV Module (Min. 300Wp)	Min. 760 kWp				
2B-2.	Min. 4.0kW Pump Inverter	100 Nos				
2B-3.	PV Combiner Box with String Fuse and PV Disconnect Circuit Breaker	100 Set				
2B-4.	Circuit Breaker box with	100 Set				

Item	Description	Quantity	Unit Price[a]		Total EXW Price[a]	Sales and other taxes
			Local Currency	EXW Price[b]		
1	2	3	4	5	6 = 3 x 5	7
	AC Circuit Breaker for Motor Protection					
2B-5.	4.0kW Submersible Pump	100 Nos				
2B-6.	4.0kW Submersible Motor	100 Nos				
2B-7.	6 inch Housing Pipe (PVC)	5,000 ft				
2B-8.	6 inch Strainer Pipe (PVC)	3,000 ft				
2B-9.	3 inch Delivery Pipe (MS)	5,000 ft				
2B-10.	6 inch Buried Pipe line	80,000 ft				
2B-11.	Min. 1.5mm^2 PV Cable (UV Resistant)	13,500 ft				
2B-12.	Min. 1.5 mm^2 Submersible Motor Cable	6,500 ft				
2B-13.	PV Module Mounting Structure (Galvanized Steel or Aluminium)	100 Set				
2B-14.	Pump Inverter and Pump Housing	100 Set				
2C. Solar Photovoltaic Pumping System, 5.5kW - 90 Sets						
2C-1.	Solar PV Module (Min. 300Wp)	Min. 972 kWp				
2C-2.	Min. 5.5kW Pump Inverter	90 Nos				
2C-3.	PV Combiner Box with String Fuse and PV Disconnect Circuit Breaker	90 Set				
2C-4.	Circuit Breaker box with AC Circuit Breaker for Motor Protection	90 Set				
2C-5.	5.5kW Submersible Pump	90 Nos				
2C-6.	5.5kW Submersible Motor	90 Nos				
2C-7.	8 inch Housing Pipe (PVC)	6,300 ft				
2C-8.	8 inch Strainer Pipe (PVC)	2,700 ft				
2C-9.	5 inch Delivery Pipe (MS)	4,500 ft				
2C-10.	8 inch Buried Pipe line	126,000 ft				

Item	Description	Quantity	Unit Price[a]		Total EXW Price[a]	Sales and other taxes
			Local Currency	EXW Price[b]		
1	2	3	4	5	6 = 3 x 5	7
2C-11.	Min. 2.5mm^2 PV Cable (UV Resistant)	13,050 ft				
2C-12.	Min. 2.5 mm^2 Submersible Motor Cable	5,850 ft				
2C-13.	PV Module Mounting Structure (Galvanized Steel or Aluminium)	90 Set				
2C-14.	Pump Inverter and Pump Housing	90 Set				
2D. Solar Photovoltaic Pumping System, 7.5kW - 45 Sets						
2D-1.	Solar PV Module (Min. 300Wp)	Min. 630 kWp				
2D-2.	Min. 7.5kW Pump Inverter	45 Nos				
2D-3.	PV Combiner Box with String Fuse and PV Disconnect Circuit Breaker	45 Set				
2D-4.	Circuit Breaker box with AC Circuit Breaker for Motor Protection	45 Set				
2D-5.	7.5kW Submersible Pump	45 Nos				
2D-6.	7.5kW Submersible Motor	45 Nos				
2D-7.	10 inch Housing Pipe (PVC)	3,600 ft				
2D-8.	10 inch Strainer Pipe (PVC)	1,350 ft				
2D-9.	6 inch Delivery Pipe (MS)	2,250 ft				
2D-10.	8 inch Buried Pipe line	72,000 ft				
2D-11.	Min. 4.0 mm^2 PV Cable (UV Resistant)	11,025 ft				
2D-12.	Min. 4.0 mm^2 Submersible Motor Cable	2,925 ft				
2D-13.	PV Module Mounting Structure (Galvanized Steel or Aluminium)	45 Set				
2D-14.	Pump Inverter and Pump Housing	45 Set				
2E. Solar Photovoltaic Pumping System, 11.0 kW - 15 Sets						
2E-1.	Solar PV Module (Min. 300Wp)	Min. 307.5 kWp				

Item	Description	Quantity	Unit Price[a]		Total EXW Price[a]	Sales and other taxes
			Local Currency	EXW Price[b]		
1	2	3	4	5	6 = 3 x 5	7
2E-2.	Min. 10.0 kW Pump Inverter	15 Nos				
2E-3.	PV Combiner Box with String Fuse and PV Disconnect Circuit Breaker	15 Set				
2E-4.	Circuit Breaker box with AC Circuit Breaker for Motor Protection	15 set				
2E-5.	10.0 kW Submersible Pump	15 Nos				
2E-6.	10.0 kW Submersible Motor	15 Nos				
2E-7.	10 inch Housing Pipe (PVC)	1,350 ft				
2E-8.	10 inch Strainer Pipe (PVC)	450 ft				
2E-9.	6 inch Delivery Pipe (MS)	750 ft				
2E-10.	8 inch Buried Pipe line	30,000 ft				
2E-11.	Min. 4.0 mm^2 PV Cable (UV Resistant)	5,500 ft				
2E-12.	Min. 6.0 mm^2 Submersible Motor Cable	975 ft				
2E-13.	PV Module Mounting Structure (Galvanized Steel or Aluminium)	15 Set				
2E-14.	Pump Inverter and Pump Housing	15 Set				
	TOTAL Column 7 to be carried forward to Schedule No. 5: Grand Summary					

Name of Bidder _____

Signature of Bidder _____

[a] *Specify currencies in accordance with ITB 19.1 of the BDS.*

[b] *Column 5 EXW Price shall include all customs duties and sales and other taxes already paid or payable on the components and raw materials used in the manufacture or assembly of the item or the customs duties and sales and other taxes already paid on previously imported items.*

Schedule No. 3: Design Services

Item	Description	Quantity	Unit Price[a]		Total Price[a]	
			Local Currency Portion	Foreign Currency Portion	Local Currency Portion	Foreign Currency Portion
1	2	3	4	5	6 = 3 x 4	7 = 3 x 5
3A-1	All Plant layout, design, drawings and documentation works including 2 (two) sets of AS-built drawings for SWPS.	350				
3A-2	Operations and Maintenance (O&M) manual for the SWP written in both Begali and English languages. Printed Bengali manual is required for each set of pump plus 10 additional copies and 2 set of English language manual is required for each type of pump for BREB and PBS. Also soft copies to be provided.	362				
	TOTAL Columns 6 and 7 to be carried forward to Schedule No. 5: Grand Summary					

Name of Bidder _____

Signature of Bidder _____

[a] *Specify currency in accordance with ITB19.1 of the BDS.*

Schedule No. 4 - Installation and Other Services

Item	Description	Quantity	Unit Price[a]		Total Price[a]	
			Local Currency Portion	Foreign Currency Portion	Local Currency Portion	Foreign Currency Portion
1	2	3	4	5	6 = 3 x 4	7 = 3 x 5
4A. Solar Photovoltaic Pumping System, 2.2 kW - 100 Sets						
4A-1.	Construction of RCC Base for PV Module Mounting Structure including all necessary materials, accessories, transportation and labor.	100 Sets				
4A-2.	Construction of buried pipeline system for water distribution including all necessary materials, accessories, transportation and labor.	100 Sets				
4A-3.	Construction of barbed wire fencing with Gate including all necessary materials, accessories, transportation and labor.	100 Sets				
4A-4.	Construction of Pump inverter and Pump housing and base including all necessary materials, accessories, transportation and labor.	100 Sets				
4A-5.	All electrical installation of the pumping system including supply & installation of earthing system and all necessary materials, accessories, transportation and labor.	100 Sets				
4A-6.	Testing and Commissioning	100 Sets				
4B. Solar Photovoltaic Pumping System, 4.0 kW - 100 Sets						
4B-1.	Construction of RCC Base for PV Module Mounting Structure including all necessary materials, accessories, transportation and labor.	100 Sets				
4B-2.	Construction of buried pipeline system for water distribution including all necessary materials, accessories, transportation and labor.	100 Sets				
4B-3.	Construction of barbed wire fencing with Gate including all necessary materials, accessories, transportation and labor.	100 Sets				
4B-4.	Construction of Pump inverter and Pump housing and base including all necessary materials, accessories, transportation and labor.	100 Sets				
4B-5.	All electrical installation of the pumping system including supply & installation of earthing system and all necessary materials, accessories, transportation and labor.	100 Sets				
4B-6.	Testing and Commissioning	100 Sets				
4C. Solar Photovoltaic Pumping System, 5.5 kW - 90 Sets						
4C-1.	Construction of RCC Base for PV Module Mounting Structure including all necessary materials, accessories, transportation and	90 Sets				

Item	Description	Quantity	Unit Price[a]		Total Price[a]	
			Local Currency Portion	Foreign Currency Portion	Local Currency Portion	Foreign Currency Portion
1	2	3	4	5	6 = 3 x 4	7 = 3 x 5
	labor.					
4C-2.	Construction of buried pipeline system for water distribution including all necessary materials, accessories, transportation and labor.	90 Sets				
4C-3.	Construction of barbed wire fencing with Gate including all necessary materials, accessories, transportation and labor.	90 Sets				
4C-4.	Construction of Pump inverter and Pump housing and base including all necessary materials, accessories, transportation and labor.	90 Sets				
4C-5.	All electrical installation of the pumping system including supply & installation of earthing system and all necessary materials, accessories, transportation and labor.	90 Sets				
4C-6.	Testing and Commissioning	90 Sets				
4D. Solar Photovoltaic Pumping System, 7.5 kW - 45 Sets						
4D-1.	Construction of RCC Base for PV Module Mounting Structure including all necessary materials, accessories, transportation and labor.	45 Sets				
4D-2.	Construction of buried pipeline system for water distribution including all necessary materials, accessories, transportation and labor.	45 Sets				
4D-3.	Construction of barbed wire fencing with Gate including all necessary materials, accessories, transportation and labor.	45 Sets				
4D-4.	Construction of Pump inverter and Pump housing and base including all necessary materials, accessories, transportation and labor.	45 Sets				
4D-5.	All electrical installation of the pumping system including supply & installation of earthing system and all necessary materials, accessories, transportation and labor.	45 Sets				
4D-6.	Testing and Commissioning	45 Sets				
4E. Solar Photovoltaic Pumping System, 11.0 kW - 15 Sets						
4E-1.	Construction of RCC Base for PV Module Mounting Structure including all necessary materials, accessories, transportation and labor.	15 Sets				
4E-2.	Construction of buried pipeline system for water distribution including all necessary materials, accessories, transportation and labor.	15 Sets				
4E-3.	Construction of barbed wire fencing with Gate including all necessary materials, accessories,	15 Sets				

Item	Description	Quantity	Unit Price[a]		Total Price[a]	
			Local Currency Portion	Foreign Currency Portion	Local Currency Portion	Foreign Currency Portion
1	2	3	4	5	6 = 3 x 4	7 = 3 x 5
	transportation and labor.					
4E-4.	Construction of Pump inverter and Pump housing and base including all necessary materials, accessories, transportation and labor.	15 Sets				
4E-5.	All electrical installation of the pumping system including supply & installation of earthing system and all necessary materials, accessories, transportation and labor.	15 Sets				
4E-6.	Testing and Commissioning	15 Sets				
4F. Training on operation and maintenance of the installed SWPs						
4F-1.	Conduct two-day training for farmers, BREB/PBS technicians or designated personnel (approximate 370 Persons) on operation and maintenance of the installed SWPs. The training shall have to be arranged in multiple batches of 10 to 15 people.	1 Lot				
4G. Environmental and Social (ESRF and EMP Related) Works						
4G-1	Supply of First Aid Box with standard contents at each working site.	1 Lot				
4G-2	Site cleaning, dust & sound control, solid and organic waste management, temporary fencing at construction area, site leveling, dressing, etc. at each working site.	1 Lot				
4G-3	Provide PPE, supply drinking water and arrange accommodation with proper sanitation facilities to the labors at each working site.	1 Lot				
TOTAL Columns 6 and 7 to be carried forward to Schedule No. 5: Grand Summary						

Name of Bidder _____

Signature of Bidder _____

[a]*Specify currency in accordance with ITB19.1 of the BDS.*

[b]*As described in SCC 22.2.7.*

Schedule No. 5: Grand Summary

Schedule No.	Title	TotalPrice[a]	
		Foreign	Local
1	**Plant and Mandatory Spare Parts Supplied from Abroad** [b]		
2	**Plant and Mandatory Spare Parts Supplied from Within the Employer's Country** [b]		
3	**Design Services**		
4	**Installation and Other Services**		
	Grand Total to be carried forward to Letter of Price Bid		

Name of Bidder _____

Signature of Bidder _____

[a] *Specify currency in accordance with ITB19.1 of the BDS. Create additional columns for foreign currencies if so required.*

[b] *Taxes and/or duties from Schedules 1 and 2 may be added to the contract price in accordance with GCC 14 (Taxes and Duties) but excluded from bid evaluation in accordance with ITB 39.2.*

Schedule No. 6: Recommended Spare Parts

Item	Description	Quantity	Unit Price[a]		Total Price[a]	
			EXW Local Parts Local Currency	CIP Imported Parts Foreign Currency	Local Currency Portion	Foreign Currency Portion
1	2	3	4	5	6 = 3 x 4	7 = 3 x 5
1.						
2.						
3.						
4.						
5.						
6.						
				TOTAL		

Name of Bidder _____

Signature of Bidder _____

[a] *Specify currency in accordance withITB19.1 of the BDS.*

Tables of Adjustment Data

To be entered by the bidder

Table A - Local Currency

Index Code	Index Description	Source of Index	Base Value and Date	Bidder's Local Currency Amount	Bidder's Proposed Weighting
	Nonadjustable	---	---	---	a: 0.15 b: _____ c: _____ d: _____ e: _____
			Total		**1.00**

Table B - Foreign Currency

Name of Currency: _____

[Insert name of currency. If the Bidder wishes to quote in more than one foreign currency, this table should be repeated for each foreign currency.]

To be entered by the bidder

Index Code	Index Description	Source of Index	Base Value and Date	Bidder's Currency in Type/Amount	Equivalent in FC1	Bidder's Proposed Weighting
	Nonadjustable	---	---	---		a: 0.15 b: _____ c: _____ d: _____ e: _____
				Total		**1.00**

- Note -

The base date shall be the date 28 days prior to the deadline for submission of the bid.

Tables of Adjustment Data shall only be included if prices are to be quoted as adjustable prices in accordance with ITB 18.6.

Bid Security

Bank Guarantee

[*Bank's name, and address of issuing branch or office*][4]

Beneficiary: ..... [*Name and address of the Employer*] .....

Date:.....

Bid Security No.:.....

We have been informed that [*name of the Bidder*] (hereinafter called "the Bidder") has submitted to you its bid dated [*insert date*] (hereinafter called "the Bid") for the execution of [*name of contract*] under Invitation for Bids No. [*insert IFB number*] ("the IFB").

Furthermore, we understand that, according to your conditions, bids must be supported by a bid guarantee.

At the request of the Bidder, we [*name of Bank*]hereby irrevocably undertake to pay you any sum or sums not exceeding in total an amount of [*amount in words*][*amount in figures*]upon receipt by us of your first demand in writing accompanied by a written statement stating that the Bidder is in breach of its obligation(s) under the bid conditions, because the Bidder:

(a) has withdrawn its Bid during the period of bid validity specified by the Bidder in the Letters of Technical and Price Bid; or

(b) does not accept the correction of errors in accordance with the Instructions to Bidders (hereinafter "the ITB"); or

(c) having been notified of the acceptance of its Bid by the Employer during the period of bid validity, (i) fails or refuses to execute the Contract Agreement, or (ii) fails or refuses to furnish the Performance Security, in accordance with the ITB.

This guarantee will expire (a) if the Bidder is the successful Bidder, upon our receipt of copies of the Contract Agreement signed by the Bidder and the Performance Security issued to you upon the instruction of the Bidder; or (b) if the Bidder is not the successful Bidder, upon the earlier of (i) our receipt of a copy of your notification to the Bidder of the name of the successful Bidder, or (ii) 28 days after the expiration of the Bidder's bid.

Consequently, any demand for payment under this guarantee must be received by us at the office on or before that date.

This guarantee is subject to the Uniform Rules for Demand Guarantees, ICC Publication No. 458.[5]

[*Authorized signature(s) and bank's seal (where appropriate)*]

---

[4] All italicized text is for use in preparing this form and shall be deleted from the final document.

[5] Or 758 as applicable.

Bid-Securing Declaration

Date: *[insert date (as day, month and year)]*
Bid No.: *[insert number of bidding process]*
Alternative No.: *[insert identification No if this is a bid for an alternative]*

To: *[insert complete name of the Employer]*

We, the undersigned, declare that:

We understand that, according to your conditions, Bids must be supported by a Bid-Securing Declaration.

We accept that we will automatically be suspended from being eligible for bidding in any contract with the Borrower for the period of time of *[insert number of years as indicated in ITB 21.2 of the BDS]*starting on the date that we receive a notification from the Employer, if we are in breach of our obligation(s) under the bid conditions, because we

(a) have withdrawn our Bid during the period of bid validity specified in the Letters of Technical and Price Bid; or

(b) do not accept the correction of errors in accordance with the Instruction to Bidders (hereinafter "the ITB"); or

(c) having been notified of the acceptance of our Bid by the Employer during the period of bid validity, (i) fail or refuse to execute the Contract; if required, or (ii) fail or refuse to furnish the Performance Security, in accordance with the ITB.

We understand that this Bid-Securing Declaration shall expire if we are not the successful Bidder, upon the earlier of (i) our receipt of your notification to us of the name of the successful Bidder; or (ii) 28 days after the expiration of our Bid.

Signed: [*insert signature of person whose name and capacity are shown*]

In the capacity of [*insert legal capacity of person signing the Bid-Securing Declaration*]

Name: [*insert complete name of person signing the Bid-Securing Declaration*]

Duly authorized to sign the bid for and on behalf of [*insert complete name of the Bidder*]

Dated on _____ day of _____, _____ [*insert date of signing*]

Corporate Seal (*where appropriate*)

Technical Proposal

Site Organization

Method Statement

Mobilization Schedule

Construction Schedule

Plant

Personnel

Equipment

Proposed Subcontractors for Major Items of Plant and Services

Manufacturer's Authorization

Affiliate Company Guarantee

Time Schedule

Functional Guarantee of the Proposed Facilities

Site Organization

The Contractor shall supply to the Bid a chart showing the proposed organization to be established by the Contractor for showing bidders capacity to mobilize key personnel's the contract consistent with proposal regarding work method and scheduling and out sourcing in sufficient detail in accordance with requirements stipulated in Section -6 (Employers requirements) the Facilities, both the survey/sub soil Investigation/ design, implementation organization and O&M must be shown in details and thereto description.

The contractor shall submit a chart, which shall include the identities of the key personnel.

Method Statement

In this section the Bidder shall submit the w**orks methodology** for executing the Facilities, based on the Employer's Requirements mentioned in this document.

In case of JV the method statement shall include clear delineation of activities/ role to be performed by each JV partner consistent with the indicated JV share in the JV agreement.

The methodology should comprise how the different components of the Facilities will be, e.g.:

Survey (sub soil investigation testing etc.);
Design, incl. modelling;
Procurement of Plant;
Implementation;
Resettlement, Community and NGO interactions;
Temporary water supply;
Solar module Implementation and other accessories
Pre-commissioning;
Training;
Commissioning / Guarantee Test(s); performance pump capacity testing;
Documentation;
O&M – details;
Tube Wells;
Defect Liability Periods;
Etc.

Mobilization Schedule

The bidder shall submit mobilization and de-mobilization schedule in detail for the survey, Sub soil investigation with design, implementation and O&M activities; and interactions to other stakeholders (NGO's).The mobilization schedule should include mobilization of different machineries and equipment, materials, skilled and unskilled manpower as per location of sites and Employer's Requirements.

Mobilization at different stages like Supply and installation of Solar module and Tube well and pump in progress and demobilization at completion of facilities condition should be clearly mentioned for each location of site.

Construction Schedule

The Bidder shall prepare and submit an overall survey/ Investigation and design, installation of Solar Module and O&M schedule for the entire package (all location and DTW's), with a detailed schedule for each location.

The Supply and installation schedule shall be designed and documented in a series of tasks and task assignments complete with projected completion target dates with the aid of Gantt charts and PERT diagrams to allow all actors to know their contribution towards fulfilling the Employer's Requirement.

Plant

In accordance with ITB 14.1, ITB 17 and the Requirements.

Personnel

Form PER – 1: Proposed Personnel

Bidders should provide the details of proposed personnel and their experience record in the relevant Information Forms below for each of the candidate.

1.	**Title of position**
	Name
2.	**Title of position**
	Name
3.	**Title of position**
	Name
4.	**Title of position**
	Name
etc.	**Title of position**
	Name

-- Note --

All titles of positions will be as listed in Section 6 (Employer's Requirements).

Form PER – 2: Resume of Proposed Personnel

The Bidder shall provide all the information requested below. Use one form for each position.

Position		
Personnel information	**Name**	**Date of birth**
	Professional qualifications	
Present employment	**Name of employer**	
	Address of employer	
	Telephone	**Contact (manager/personnel officer)**
	Fax	**E-mail**
	Job title	**Years with present employer**

Summarize professional experience in reverse chronological order. Indicate particular technical and managerial experience relevant to the project.

From	To	Company/Project/Position/Relevant Technical and Management Experience

Equipment

Form EQU: Equipment

The Bidder shall provide adequate information and details to demonstrate clearly that it has the capability to meet the equipment requirements indicated in Section 6 (Employer's Requirements), using the Forms below. A separate Form shall be prepared for each item of equipment listed, or for alternative equipment proposed by the Bidder.

Item of Equipment		
Equipment Information	**Name of manufacturer**	**Model and power rating**
	Capacity	**Year of manufacture**
Current Status	**Current location**	
	Details of current commitments	
Source	**Indicate source of the equipment** ☐ **Owned** ☐ **Rented** ☐ **Leased** ☐ **Specially manufactured**	

Omit the following information for equipment owned by the Bidder.

Owner	**Name of owner**	
	Address of owner	
	Telephone	**Contact name and title**
	Fax	**Telex**
Agreements	**Details of rental/lease/manufacture agreements specific to the project**	

Proposed Subcontractors and/or Manufacturers for Major Items of Plant and Services

The following Subcontractors and/or Manufacturers are proposed for carrying out the item of the facilities indicated based on Criterion 2.5 of Section 3 (Evaluation and Qualification Criteria). Bidders are free to propose more than one for each item.

Major Items of Plant and Services	Proposed Subcontractors or Manufacturers	Nationality

Manufacturer's Authorization

Date: *[insert date (as day, month and year) of bid submission]*

OCB No.: *[insert number of bidding process]*

To: *[insert complete name of the Employer]*

WHEREAS

We *[insert complete name of the manufacturer or manufacturer's authorized agent]*, who are official manufacturers or agent authorized by the Manufacturer of *[insert type of goods manufactured]*, having factories at *[insert full address of manufacturer's factories]*, do hereby authorize *[insert complete name of the Bidder]* to submit a bid the purpose of which is to provide the following goods, manufactured by us *[insert name and/or brief description of the goods]*, and to subsequently negotiate and sign the Contract.

We hereby extend our full guarantee and warranty in accordance with Clause 27 of the General Conditions of Contract, with respect to the goods offered by the above firm.

Signed: *[insert signature(s) of authorized representative(s) of the manufacturer]*

Name: *[insert complete name(s) of authorized representative(s) of the manufacturer]*

Title: *[insert title]*

Duly authorized to sign this Authorization on behalf of *[insert complete name of the manufacturer]*

Dated on _____ day of _____, _____ *[insert date of signing]*

-- Note --

The bidder shall require the manufacturer to fill out this form in accordance with the instructions indicated. This letter of authorization should be signed by a person with the proper authority to sign documents that are binding on the manufacturer. The bidder shall include it in its bid, if so indicated in the BDS.

Affiliate Company Guarantee

Name of Contract/Contract No.: _____

Name and address of Employer: _____

_____

[*together with successors and assigns*].

We have been informed that [*name of Contractor*] (hereinafter called the "Contractor") is submitting an offer for the above-referenced Contract in response to your invitation, and that the conditions of your invitation require its offer to be supported by an affiliate company guarantee.

In consideration of you, the Employer, awarding the Contract to the Contractor, we [*name of affiliated company*] irrevocably and unconditionally guarantee to you, as a primary obligation, that (i) throughout the duration of the Contract, we will make available to the Contractor our financial, technical capacity, expertise and resources required for the Contractor's satisfactory performance of the Contract; and (ii) we are fully committed, along with the Contractor, to ensuring a satisfactory performance of the Contract.

If the Contractor fails to so perform its obligations and liabilities and comply with the Contract, we will indemnify the Employer against and from all damages, losses and expenses (including legal fees and expenses) which arise from any such failure for which the Contractor is liable to the Employer under the Contract.

This guarantee shall come into full force and effect when the Contract comes into full force and effect. If the Contract does not come into full force and effect within a year of the date of this guarantee, or if you demonstrate that you do not intend to enter into the Contract with the Contractor, this guarantee shall be void and ineffective. This guarantee shall continue in full force and effect until all the Contractor's obligations and liabilities under the Contract have been discharged, when this guarantee shall expire and shall be returned to us, and our liability hereunder shall be discharged absolutely.

This guarantee shall apply and be supplemental to the Contract as amended or varied by the Employer and the Contractor from time to time. We hereby authorize them to agree on any such amendment or variation, the due performance of which and compliance with which by the Contractor are likewise guaranteed hereunder. Our obligations and liabilities under this guarantee shall not be discharged by any allowance of time or other indulgence whatsoever by the Employer to the Contractor, or by any variation or suspension of the works to be executed under the Contract, or by any amendments to the Contract or to the constitution of the Contractor or the Employer, or by any other matters, whether with or without our knowledge or consent.

This guarantee shall be governed by the law of the same country (or other jurisdiction) that governs the Contract and any dispute under this guarantee shall be finally settled under the [*Rules or Arbitration provided in the Contract*]. We confirm that the benefit of this guarantee may be assigned subject only to the provisions for assignment of the Contract.

Signed by:…… Signed by: ……

[*signature*] [*signature*]

…… ……

[*name*] [*name*]

[*position in parent/subsidiary company*] [*position in parent/subsidiary company*]

Date:……

-- Note --

If permitted in accordance with ITB 35.2 of the BDS, the Bidder shall fill out the Affiliate Company Guarantee Form for each subsidiary, parent entity, affiliate, subcontractor, etc. that the Bidder submits for consideration of the Employer in determining its qualifications.

Time Schedule

To be used by Bidder when alternative Time for Completion is invited in ITB 13.2.

Functional Guarantee of the Proposed Facilities

Form FUNC

The Bidder shall copy on the left column of the table below, the identification of each functional guarantee required in the Specification and stated by the Employer in EQC 1.3.4 of Section 3, Evaluation and Qualification Criteria, and on the right column, provide the corresponding value for each functional guarantee of the proposed plant and equipment.

Functional Guarantee *[as required by the Employer in Section 3]*	**Functional Guarantee Value Offered by the Bidder**
1.	
2.	
3.	
…	

Bidder’s Qualification

To establish its qualifications to perform the contract in accordance with Section 3 (Evaluation and Qualification Criteria) the Bidder shall provide the following information requested in the corresponding Information Sheets.

Form ELI - 1: Bidder's Information Sheet

Bidder's Information	
Bidder's legal name	
In case of a Joint Venture, legal name of each partner	
Bidder's country of constitution	
Bidder's year of constitution	
Bidder's legal address in country of constitution	
Bidder's authorized representative (name, address, telephone number(s), fax number(s), e-mail address)	

Attached are copies of the following documents:

- ❑ 1. In case of a single entity, articles of incorporation or constitution of the legal entity named above, in accordance with ITB 4.1 and ITB 4.2
- ❑ 2. Authorization to represent the firm or Joint Venture named above, in accordance with ITB 22.2
- ❑ 3. In case of a Joint Venture, a letter of intent to form a Joint Venture or Joint Venture agreement, in accordance with ITB 4.1
- ❑ 4. In case of a government-owned enterprise, any additional documents not covered under 1 above required to comply with ITB 4.5

Form ELI - 2: Joint Venture Information Sheet

Each member of the Joint Venture must fill out this form separately. Subcontractor must fill out this form.

Joint Venture/Subcontractor Information	
Bidder's legal name	
Joint Venture Partner's or Subcontractor's legal name	
Joint Venture Partner's or Subcontractor's country of constitution	
Joint Venture Partner's or Subcontractor's year of constitution	
Joint Venture Partner's or Subcontractor's legal address in country of constitution	
Joint Venture Partner's or Subcontractor's authorized representative information (name, address, telephone number(s), fax number(s), e-mail address)	

Attached are copies of the following documents:

- ❑ 1. Articles of incorporation or constitution of the legal entity named above, in accordance with ITB 4.1 and ITB 4.2
- ❑ 2. Authorization to represent the firm named above, in accordance with ITB 22.2
- ❑ 3. In the case of a government-owned enterprise, documents establishing legal and financial autonomy and compliance with commercial law, in accordance with ITB 4.5

Subcontractors are those listed in Technical Proposal – Proposed Subcontractors and/or Manufacturers for Major Items of Plant and Services.

Form CON– 1: Historical Contract Nonperformance

Each Bidder must fill out this form in accordance with Criteria 2.2.1 and 2.2.3 of Section 3 (Evaluation and Qualification Criteria) to describe any history of nonperforming contracts and pending litigation or arbitration formally commenced against it.

In case of a Joint Venture, each Joint Venture Partner must fill out this form separately and provide the Joint Venture Partner's name:

Joint Venture Partner:_____

Table 1: History of Nonperforming Contracts

Choose one of the following:

- ❑ No nonperforming contracts.
- ❑ Below is a description of nonperforming contracts involving the Bidder (or each Joint Venture member if Bidder is a Joint Venture).

Year	Description	Amount of Non performed Portion of Contract ($ equivalent)	Total Contract Amount ($ equivalent)
[insert year]	Contract Identification: *[indicate complete contract name/ number, and any other identification]* Name of Employer: *[insert full name]* Address of Employer: *[insert street/city/country]* Reason(s) for nonperformance: *[indicate main reason(s)]*	*[insert amount]*	*[insert amount]*

Table 2: Pending Litigation and Arbitration

Choose one of the following:

- ❑ No pending litigation and arbitration.
- ❑ Below is a description of all pending litigation and arbitration against the Bidder (or each Joint Venture member if Bidder is a Joint Venture).

Year	Matter in Dispute	Value of Pending Claim in $ Equivalent	Value of Pending Claim as a Percentage of Net Worth
[insert year]	Contract Identification: *[indicate complete contract name/ number, and any other identification]* Name of Employer: *[insert full name]* Address of Employer: *[insert street/city/country]* Matter of Dispute: *[indicate full description of dispute]* Party who initiated the dispute: *[indicate "Employer" or "Contractor"]* Status: *[indicate status of dispute]*	*[insert amount]*	*[insert amount]*

- Note -

Table 2 of this form shall only be included if Criterion 2.2.3 of Section 3 (Evaluation and Qualification Criteria) is applicable.

Form FIN - 1: Historical Financial Performance

Each Bidder must fill out this form.

In case of a Joint Venture, each Joint Venture Partner must fill out this form separately and provide the Joint Venture Partner's name:

Joint Venture Partner: _____

Financial Data for Previous_____ Years [$ Equivalent]		
Year 1:	**Year 2:**	**Year __:**

Information from Balance Sheet

Total Assets (TA)			
Total Liabilities (TL)			
Net Worth = TA-TL			
Current Assets (CA)			
Current Liabilities (CL)			
Working Capital = CA - CL			

Most Recent Working Capital		To be obtained for most recent year and carried forward to FIN-3 Line 1; in case of Joint Ventures, to the corresponding Joint Venture Partner's FIN – 3.

Information from Income Statement

Total Revenues			
Profits Before Taxes			
Profits After Taxes			

❑ Attached are copies of financial statements (balance sheets including all related notes, and income statements) for the last _____ years, as indicated above, complying with the following conditions.

- Unless otherwise required by Section 3 of the Bidding Documents, all such documents reflect the financial situation of the legal entity or entities comprising the Bidder and not the Bidder's parent companies, subsidiaries or affiliates.
- Historical financial statements must be audited by a certified accountant.
- Historical financial statements must be complete, including all notes to the financial statements.
- Historical financial statements must correspond to accounting periods already completed and audited (no statements for partial periods shall be requested or accepted).

Form FIN - 2: Average Annual Turnover

Each Bidder must fill out this form.

The information supplied should be the Annual Turnover of the Bidder or each member of a Joint Venture in terms of the amounts billed to clients for each year for work in progress or completed, converted to US dollars at the rate of exchange at the end of the period reported.

In case of a Joint Venture, each Joint Venture Partner must fill out this form separately and provide the Joint Venture Partner's name:

Joint Venture Partner: _____

Annual Turnover Data for the Last____ Years			
Year	**Amount Currency**	**Exchange Rate**	**$ Equivalent**
		Average Annual Turnover	

Form FIN – 3: Availability ofFinancial Resources

Bidders must demonstrate sufficient financial resources, usually comprising of Working Capital supplemented by credit line statements or overdraft facilities and others to meet the Bidder's financial requirements for

(a) its current contract commitments, and

(b) the subject contract.

In case of a Joint Venture, each Joint Venture Partner must fill out this form separately and provide the Joint Venture Partner's name:

Joint Venture Partner: _____

Financial Resources		
No.	**Source of financing**	**Amount ($ equivalent)**
1	Working Capital (to be taken from FIN-1)	
2	Credit Line[a]	
3	Other Financial Resources	
	Total Available Financial Resources	

[a] *To be substantiated by a letter from the bank issuing the line of credit.*

Form FIN- 4: Financial Requirements for Current Contract Commitments

Bidders (or each Joint Venture partner) should provide information on their current commitments on all contracts that have been awarded, or for which a letter of intent or acceptance has been received, or for contracts approaching completion, but for which an unqualified, full completion certificate has yet to be issued.

In case of a Joint Venture, each Joint Venture Partner must fill out this form separately and provide the Joint Venture Partner's name:

Joint Venture Partner: _____

Current Contract Commitments						
No.	**Name of Contract**	**Employer's Contact (Address, Tel, Fax)**	**Contract Completion Date**	**Outstanding Contract Value (X) [a]**	**Remaining Contract Period in months (Y)[b]**	**Monthly Financial Resources Requirement (X / Y)**
1						
2						
3						
4						
Total Monthly Financial Requirement for Current Contract Commitments						**$** . . . . .

a *Remaining outstanding contract values to be calculated from 28 days prior to the bid submission deadline ($ equivalent based on the foreign exchange rate as of the same date).*

b *Remaining contract period to be calculated from 28 days prior to bid submission deadline.*

Form FIN - 5: Self-Assessment Tool for Bidder's Compliance to Financial Resources (Criterion 2.3.3 of Section 3)

This form requires the same information submitted in Forms FIN-3 and FIN-4. All conditions of "Available Financial Resources Net of CCC ≥ Requirement for the Subject Contract" must be satisfied to qualify.

Form FIN-5A: For Single Entities

For Single Entities: (A)	Total Available Financial Resources from FIN – 3 (B)	Total Monthly Financial Requirement for Current Contract Commitments (CCC) from FIN – 4 (C)	Available Financial Resources Net of CCC D = (B - C)	Requirement for the Subject Contract (E)	Results: Yes or No [*D must be greater than or equal to E*] (F)
_____ (Name of Bidder)				. . . . .	

Form FIN-5B: For Joint Ventures

For Joint Ventures: (A)	Total Available Financial Resources from FIN – 3 (B)	Total Monthly Financial Requirement for Current Contract Commitments (CCC) from FIN – 4 (C)	Available Financial Resources Net of CCC D = (B - C)	Requirement for the Subject Contract (E)	Results: Yes or No [*D must be greater than or equal to E*] (F)
One Partner:					
_____ (Name of Partner)				. . . . .	
Each Partner:					
_____ (Name of Partner 1)				. . . . .	
_____ (Name of Partner 2)				. . . . .	
_____ (Name of Partner 3)				. . . . .	
All partners combined	∑D = Sum of available financial resources net of current contract commitments for all partners		∑D =_____	. . . . .	

Form FIN – 5 is made available for use by the bidder as a self-assessment tool, and by the Employer as an evaluation work sheet, to determine compliance with the financial resources requirement as stated in 2.3.3. Failure to submit Form FIN - 5 by the Bidder shall not lead to bid rejection.

Form EXP – 1: Contracts of Similar Size and Nature

Fill out one (1) form per contract.

The exchange rate to be used to calculate the value of the contract for conversion to a specific currency shall be the selling rate of the Borrower's national bank on the date of the contract.

Contract of Similar Size and Nature			
Contract No . . . . . **of**	**Contract Identification**		
Award Date		**Completion Date**	
Role in Contract	❑ **Contractor**	❑ **Management Contractor**	❑ **Subcontractor**
Total Contract Amount	**$**		
If partner in a Joint Venture or Subcontractor, specify participation of total contract amount	**Percent of Total**	**Amount**	
Employer's name **Address** **Telephone number** **Fax number** **E-mail**			
Description of the Similarity in Accordance with Criterion 2.4.1 of Section 3 (Evaluation and Qualification Criteria)			

Form EXP - 2: Experience in Key Activities

Fill out one (1) form per contract.

Each Bidder must fill out this form.

If complied by Specialist Subcontractor, each Specialist Subcontractor must fill out this form and provide the Specialist Subcontractor's name:

Specialist Subcontractor: _____

Contract with Similar Key Activities		
Contract No . . . . . of	**Contract Identification**	
Award Date		**Completion Date**
Role in Contract	❑ **Contractor** ❑ **Management Contractor** ❑ **Subcontractor**	
Total Contract Amount	**$**	
If partner in a Joint Venture or Subcontractor, specify participation of total contract amount	**Percent of Total**	**Amount**
Employer's name **Address** **Telephone number** **Fax number** **E-mail**		
Description of the Key Activities in Accordance with Criterion 2.4.2 of Section 3 (Evaluation and Qualification Criteria)		

Form EXP - 3: Subcontractors

Fill out one (1) form per contract.

Contract for the Major Items			
Contract No . . . . . .of.	**Contract Identification**		
Award Date		**Completion Date**	
Role in Contract	❑ **Contractor**	❑ **Management Contractor**	❑ **Subcontractor**
Total Contract Amount	**$**		
If partner in a Joint Venture or Subcontractor, specify participation of total contract amount	**Percent of Total**	**Amount**	
Employer'sname **Address** **Telephone number** **Fax number** **E-mail**			
Description of the Major Items in Accordance with Criterion 2.5 of Section 3 (Evaluation and Qualification Criteria)			

Section 5: Eligible Countries

This section contains the list of eligible countries.

Eligible countries

1.	AFG	Afghanistan
2.	ARM	Armenia
3.	AUS	Australia
4.	AUT	Austria
5.	AZE	Azerbaijan
6.	BAN	Bangladesh
7.	BEL	Belgium
8.	BHU	Bhutan
9.	BRU	Brunei Darussalam
10.	CAM	Cambodia
11.	CAN	Canada
12.	PRC	China, People's Republic of
13.	COO	Cook Islands
14.	DEN	Denmark
15.	FIJ	Fiji Islands, Republic of
16.	FIN	Finland
17.	FRA	France
18	GEO	Georgia
19.	GER	Germany
20.	HKG	Hong Kong, China
21.	IND	India
22.	INO	Indonesia
23.	IRE	Ireland
24.	ITA	Italy
25.	JPN	Japan
26.	KAZ	Kazakhstan
27.	KIR	Kiribati
28.	KOR	Korea, Republic of
29.	KGZ	Kyrgyz Republic
30.	LAO	Lao PDR
31.	LUX	Luxembourg
32.	MAL	Malaysia
33.	MLD	Maldives
34.	RMI	Marshall Islands
35.	FSM	Micronesia, Federal States of
36.	MON	Mongolia
37.	MYA	Myanmar
38.	NAU	Nauru, Republic of
39.	NEP	Nepal
40.	NET	Netherlands
41.	NZL	New Zealand
42.	NOR	Norway
43.	PAK	Pakistan
44.	PAL	Palau
45.	PNG	Papua New Guinea
46.	PHI	Philippines
47.	POR	Portugal
48.	SAM	Samoa
49.	SIN	Singapore
50.	SOL	Solomon Islands
51.	SPA	Spain
52.	SRI	Sri Lanka
53.	SWE	Sweden
54.	SWI	Switzerland
55.	TAJ	Tajikistan
56.	TAP	Taipei, China
57.	THA	Thailand
58.	TIM	Timor-Leste
59.	TON	Tonga
60.	TUR	Turkey
61.	TKM	Turkmenistan
62.	TUV	Tuvalu
63.	UKG	United Kingdom
64.	USA	United States of America
65.	UZB	Uzbekistan
66.	VAN	Vanuatu
67.	VIE	Viet Nam
68.	NU	Niue

BIDDING DOCUMENT FOR

DESIGN, SUPPLY, INSTALLATION AND COMMISSIONING OF SPV PUMPING SYSTEM IN RANGPUR PBS-2.

BID PACKAGE NO.: SPIP-W-2

POWER SYSTEM EFFICIENCY IMPROVEMENT PROJECT

[ADB LOAN NO.: 2769-BAN, AND GRANT NO.: 0583-BAN (EF) & 0584-BAN (EF)]

PART II OF III (REQUIREMENTS)

ISO 9001, ISO 14001 &
OHSAS 18001 Certified

BANGLADESH RURAL ELECTRIFICATION BOARD (BREB)
HEAD OFFICE, ACADEMIC BUILDING, 6TH FLOOR
NIKUNJA-2, KHILKHET, DHAKA-1229
BANGLADESH

SEPTEMBER 2019

Section 6: Employer's Requirements

Table of Contents

1. Scope of Supply of Plant and Services 6-2

2. Specifications 6-5

3. Drawings 6-23

4. Supplementary Information 6-34

5. Certificates 6-36
   5.1 Equipment Certifications 6-35
   5.2 Form of Completion Certificate 6-37
   5.3 Form of Operational Acceptance Certificate 6-38

6. Change Orders 6-39
   6.1. Change Order Procedure 6-40
      6.1.1 General 6-40
      6.1.2 Change Order Log 6-40
      6.1.3 References for Changes 6-40
   6.2 Change Order Forms 6-41
      6.2.1 Request for Change Proposal Form 6-41
      6.2.2 Estimate for Change Proposal Form 6-42
      6.2.3 Acceptance of Estimate Form 6-43
      6.2.4 Change Proposal Form 6-44
      6.2.5 Change Order Form 6-46
      6.2.6 Pending Agreement Change Order Form 6-47
      6.2.7 Application for Change Proposal Form 6-48

7. Personnel Requirements 6-49

8. Equipment Requirements 6-50

1. Scope of Supply of Plant and Services

Package Name: Design, Supply, Installation and Commissioning of SPV Pumping System in Rangpur PBS-2.

Package No. SPIP-W-2

1.1. Objective: Contractor shall provide a total "turnkey" project including all necessary equipment, materials, design, manufacturing and installation services for the installation of photovoltaic for water pumping systems. Each system should incorporate some arrangement so that it can be used for other usage like rice husking, Battery Charging etc. The Contractor shall install high quality and well-designed solar water pumps (SWPs) capable of providing useful service for 25 years minimum. Contractor should prepare a system summary detailing each location, required components, and predicted system energy production (kWh) and water production (m^3/day) on a monthly basis. This project shall meet all requirements of this Statement of Work and other specifications included that apply. Please refer to Technical Specifications for system size and power requirements for each lot of SWPs. The Contractor will coordinate final system design and installation with BREB after contract award.

1.2. Project: Solar Photovoltaic Pumping for Agricultural Irrigation Project

1.3. Locations: Any selected location at Badorganj, Rangpur Sadar, Gangachara, Taraganj, Kaunia upzila and any other area under Rangpur Palli Biddyut Samity- 2.

1.4. Pump System sizes, quantities and summary of requirements:

Pump Sizes (kW)	2.2	4.0	5.5	7.5	11.0
Pump Quantity (Pcs)	100	100	90	45	15
Approximate Depth of Bore Hole/Tube Well (ft)	80	80	100	110	120
Min. Diameter of the Tube Well (inch)	6	6	8	10	10
Approximate Length of underground water distribution line (ft)	600	800	1400	1600	2000
Min. Diameter of the underground water distribution lines (inch)	6	6	8	10	10
Pump and Controller Housing	Required	Required	Required	Required	Required

1.5. Delivery and Completion Schedule

Delivery Schedule (Duration**)**	**Location**	**Completion Date for Related Services**
10 (ten) Months from the date of signing of the contract.	Any selected location at Badorganj, Rangpur Sadar, Gangachara, Taraganj, Kaunia upzila and any other area under Rangpur Palli Biddyut Samity-2. A list of final construction/installation sites will be provided during contract signing stage.	10 (ten) Months from the date of signing of the contract.

1.6. Scope of Work.

1.6.1 The Contractor shall perform all professional services as necessary to provide the Employer with a complete package including the requirements outlined in this document of Work. The Contractor shall install the project such that it is operational and compliant with all applicable standards and other Government rules and regulations of Bangladesh. The Contractor shall include specifications, calculations of expected outputs and drawings in the design package, and turn it over to BREB before parts procurement. After approval by BREB of the final design package, the Contractor shall provide all necessary components, fitting, fixtures and accessories to successfully complete the photovoltaic system installation.

1.6.2 Design, Supply, Installation, Testing and commissioning of fully functional SWP that meets the requirements of this tender on turnkey basis.

1.6.3 Conduct two-day training for farmers, BREB/PBS technicians or designated personnel (approximate 370 Persons) on operation and maintenance of the installed SWPs.The training shall have to be arranged in multiple batches of 10 to 15 people.

1.7. Deliverables

1.7.1. A preliminary Design package for design approval.

1.7.2. Drawings, calculations, documents and reports, including evidence of a minimum 25-year design life for the entire SWPs.

1.7.3. QA/QC Program.

1.7.4. Certified factory test reports on major equipment.

1.7.5. Project implementation schedule for the design, fabrication, installation, testing and commissioning of the SWPs within 7 days form the date of signing of the contract. Project implementation schedule must be confined in 10 months form the date of signing of the contract.

1.7.6. An Operations and Maintenance (O&M) manual for the SWP written in both Begali and English languages. Printed Bengali manual is required for each set of pump and English language manual is required for each type of pump for BREB and PBS. Also soft copies to be provided.

1.7.7. A final Drawings package corrected to as-built conditions.

1.8. Roles and Responsibilities:

1.8.1. **Contractor.** The Contractor is required to provide:

1) Design concept
2) Final construction documents and engineering calculations that are signed and sealed by a licensed civil engineer.
3) Datasheet and specification sheets for materials and products.
4) Construction materials, equipment and labor
5) Design and construction supervision / contract management
6) Quality control plan (QCP)
7) Implementation of Environmental and Social Review Framework (ESRF) and Environmental Management Plan (EMP)
8) Safety plan
9) Inspections and tests (per QCP)
10) Commissioning of project
11) Mentoring and training local operating staff for operation and maintenance
12) Warranty Service during first 60 months and optional service plan afterwards.

1.8.2. **Owner/Employer:**

1) Review for approval design submittals and quality control plan (QCP).

2) Witness inspections and testing of individual system components before installation as well as complete system after installation.
3) Make progress payments for design / construction as per contract.
4) Monitoring Environmental and Social Review Framework (ESRF) and Environmental Management Plan (EMP) implementation

1.9. Document Language:

All supporting documents like type test certificates, warranty certificates, ISO certificates shall be in English language. In case of the documents of other languages must be translated in English language and notarized.

1.10. Document Verification:

The client's policy is to independently verify the submitted document directly with the issuing authority which requires link for online verification or the contact details of the respective issuing authority such as contact person's name, fax no. and e- mail address, which shall also be provided in the bid.

1.11. Port of Entry:

Chittagong & Mongla sea ports and Benapole land port are the principal port of entry for material to Bangladesh.

2. Specifications

Package Name: Design, Supply, Installation and Commissioning of SPV Pumping System in Rangpur PBS-2.

Package No. SPIP-W-2

2.1 General Requirements:

Each Solar Water Pumping system shall consist of the following:

1) PV array.
2) PV String Combiner box(es) with dc string over current protection at 156% Isc and Surge Protection (Arrestor) Device (SPD) Type 2.
3) MPPT Pump Inverter.
4) AC Power Panel with circuit breaker and Surge Protection Device (SPD) Type 3.
5) Submersible pump with 3 phase ac submersible motor with cable.
6) System ground and equipment earthing with earth resistance less than 1 ohm.
7) Each SWP system there shall be an outdoor grade steel or aluminum cabinet for housing of pump and Tube Well. Inverters may be mounted on the array frame with adequate heat ventilation. The cabinet should be easily dismantle able so that it can facilitate easy maintenance of pump, motor and inverter when necessary.
8) Provide PVC buried pipeline system for water distribution.
9) Conceptual reference diagrams of the complete system can be found under Drawings of this section.

2.2 Defect Liability Period (DLP):

The Defect Liability Period (DLP) for each solar PV pumping system shall be 5 (Five) years from the date of Operational Acceptance and shall be secured by a performance security whose validity shall be 5 years plus 28 days from the date of operational acceptance.

During the 1st two years of the defect liability period any fault arising due to manufacturing defect or poor installation, in any component must be resolved by replacing that component. In such event of any replacement consequent to any defect, during the 1st two years of defect liability period, the warranty period for that component only will recommence from the date of acceptance of replacement by the Employer.

During this Defect Liability Period, if the pumping system, fails to deliver water owing to a defect, the Contractor shall be responsible for remedying the defect within 24 hours of notice by the Employer. In case of failure to remedy the defect, the Employer may proceed to do such work, and the reasonable costs incurred by the Employer in connection therewith shall be recovered by the Employer in accordance with GCC 27.7.

2.3 Product Warranty:

Each component of the whole solar pumping system shall be covered by standard warranty terms for specified period as mentioned in the specifications of each component.

2.4 Calculations: The Contractor will provide the following calculations:

1) Design and performance calculations for proposed SWPs using PVSyst or equivalent software.

2) System energy and water production calculations showing estimated monthly and yearly energy output and monthly water pumped.

2.5 PV Modules:

PV modules shall be a commercial off-the-shelf product and shall be properly installed according to manufacturer's instructions and electrical code requirements. All PV modules used in an array should be new and identical modules. All modules installed in a series string shall be installed in the same plane/orientation. PV module installation design shall ensure optimum utilization of land, best air circulation to avoid temperature affect and wind pressure. The modules must be securely connected to the module mounting structure. All PV arrays should be fixed and face the equator (i.e. true south).

The PV modules shall be permanently installed in a location which is free from shading by obstacles such as trees, natural topography, sub-array row spacing, etc. so as to maximize the amount of sun light available year-round on a daily basis. At a minimum, all PV arrays shall be shade free from 8:00 AM until 4:30 PM (solar time). Any PV modules with frames should be bonded and grounded against atmospheric discharges.

Proposed PV modules should comply with following technical specifications:

Sl. No	Item Description	Unit	BREB Requirement	Bidders Guaranteed Values in relation to Manufacturer's Datasheet or Catalogue
1.	Name of the Manufacturer		Please specify	
2.	Address of the Manufacturing Unit		Please specify	
3.	Manufacturing Country		Please specify	
4.	Model No.		Please specify	
5.	Type of Solar Cell		Please specify	
6.	Min. Power at STC (Pmax)	Wp	300	
7.	PV Module STC Rating Power Tolerance		0 to +3% or Better. Negative tolerance not acceptable.	
8.	Maximum Power Voltage (Vmp)	V	Please specify	
9.	Maximum Power Current (Imp)	A	Please specify	
10.	Number of Cells in series		Please specify	
11.	Open circuit Voltage (Voc)	V	Please specify (Must be 120% of the Vmp)	
12.	Short Circuit Current(Isc)	A	Please specify	
13.	Min. PV Module Efficiency	%	16	
14.	By Pass Diodes		Required	
15.	Construction		Please specify	
16.	Module Frame		Please specify	

Sl. No	Item Description	Unit	BREB Requirement	Bidders Guaranteed Values in relation to Manufacturer's Datasheet or Catalogue
17.	Minimum Nominal Operating Cell Temperature (NOCT)	^{0}C	45	
18.	Minimum Operating Temperature range	^{0}C	0-85	
19.	Min. Static Load Capacity	Pa	5400	
20.	Min. Wind Load Capacity	Pa	2400	
21.	Hailstone impact		Must meet IEC 61215 requirement	
22.	Junction Box		Min. IP67	
23.	PV Module dimensions		Please specify	
24.	Module temperature coefficients		Please specify	
25.	Module Certification		Min. IEC 61215 / IEC 61730, UL 1703 / IEC 61215, UL 1703: CSA / IEC 61701 for IEC accredited internationally recognized independent laboratory or UL to be submitted.	
26.	Warranty		Workmanship Warranty: Min. 10 years. Performance Warranty: Max. 2.5% of STC rating after 1 year, 90% of STC rating after 10 Years and 80% of STC rating after 25 Years. Performance curve to be provided.	
27.	Manufacturer's Authorization and Warranty Certificate		Manufacturer's Authorization and Warranty certificate or declaration should be be signed by the Owner/ President/ CEO/ Managing Director/ Director or equivalent who is/ are permanent member of the organization.	
28.	Other Certifications		Manufacturer's ISO 9001	
29.	Type test Certificate and ISO 9001 certificate verification link		Please list	
30.	Catalogue		Manufacturer's catalogue to be submitted which is available on manufacturer's website.	

2.6 MPPT Pump Inverter:

MPPT Pump inverters should be off the shelf that can provide continuous loads with surge power capability with associated controls and shall be properly installed according to manufacturer's instructions. The Inverters hall be capable of completely automatic, unattended operation, including wake-up and disconnect. The inverters shall also is capable of operation by local or remote controls as well as comply with the following technical specifications:

Sl. No	Item Description	Unit	BREB Requirement					Bidders Guaranteed Values in relation to Manufacturer's Datasheet or Catalogue
1.	Capacity	kW	2.2	4.0	5.5	7.5	11.0	
2.	Name Of the Manufacturer		Please Specify					
3.	Address of the Manufacturing Unit		Please Specify					
4.	Manufacturing Country		Please Specify					
5.	Model No.		Please Specify					
6.	MPPT Type		Dynamic MPPT					
7.	Minimum Estimated Solar PV input Power (STC) Capacity	kWp	4.3	7.6	10.8	14.0	20.4	
8.	Minimum Solar PV input Open Circuit Voltage capacity (V_{oc})	VDC	125% of Vmp					
9.	Minimum Functional input MPP Voltage range	VDC	360-750 or Wider					
10.	Minimum no. of input strings		2	2	2	3	3	
11.	Maximum string input current capacity	ADC	156% of Isc					
12.	Min. AC rated output power capacity	kW	2.2	4.0	5.5	7.5	11.0	
13.	Output frequency range	Hz	0 to 50Hz					
14.	Nominal rated output voltage	VAC	380-460, Three Phase					
15.	Min. Nominal rated output current capacity	A	6	10.5	14.5	20	29	
16.	MPPT Tracking Efficiency	%	99					
17.	Minimum Tested Inverter Max. Conversion Efficiency	%	96		98			
18.	Min. Ingress (Dust) Protection Rating		NEMA TYPE 6 OR IP65					
19.	Operating temperature range		1^0C to 60^0C, Automatic de-rated operation above 60^0C					
20.	Cooling		Smart and intelligent forced cooling as needed.					
21.	Humidity tolerance		100% Non-Condensing					

Sl. No	Item Description	Unit	BREB Requirement	Bidders Guaranteed Values in relation to Manufacturer's Datasheet or Catalogue
22.	Mandatory Electrical protection on DC side		Reverse polarity protection, 156% I_{sc} over current protection, 125% V_{oc} over voltage protection	
23.	Electrical protection on ac side		125% I_{load} over current 125% V_{load} over voltage	
24.	Shutdown		The INVERTER shall shutdown under the following conditions and remain in the shutdown mode until a reset signal, either local or remote, is initiated: a) Control logic problem. b) Short Circuit. c) Dry Run Detection.	
25.	Standby		Some faults or failures are transient in nature. The inverter shall have its output off/disconnected upon occurrence and inverter will attempt to start-up after some delay without requiring a manual reset. The inverter shall go into standby mode under the following conditions: Excessive solar power (Solar Enhancement): – During partly cloudy and cool conditions, the PV array may, for a brief period of time (< 5 minutes), operate above the system rating due to cloud edge effect. The INVERTER should at a minimum, shut down to protect itself from excessive power flow, or if possible, back the PV system off the maximum power point to allow continuous operation during solar enhancement. The INVERTER should resume normal operation automatically after such a solar enhancement has passed. Insufficient Solar Power – When the power available from the PV array is insufficient to supply the tare losses of the INVERTER, the INVERTER shall go to a standby mode. The PCU/INVERTER control logic	

Sl. No	Item Description	Unit	BREB Requirement	Bidders Guaranteed Values in relation to Manufacturer's Datasheet or Catalogue
			shall prevent recycling during long periods (20 minutes or longer) of insufficient irradiance	
26.	Local Monitor		Inverter must have built-in data acquisition LCD/LED monitor with keypad for monitoring and configuration of operational parameters on-site. Also it should be able to check daily and historical operational and performance data, fault history, run time etc. through the on-site monitor.	
27.	Remote Monitoring		There should be provision of remote monitoring option for remote operation of the pumping system, logging of the pumping performance data for performance evaluation of the pumping system. Performance data which should be remotely visible are daily energy generation, daily water discharge, power and energy generation pattern, fault history etc.	
28.	Warranty		Min. 5 Years	
29.	Manufacturer's Authorization and Warranty Certificate		Manufacturer's Authorization and Warranty certificate or declaration should be signed by the Owner/ President/ CEO/ Managing Director/ Director or equivalent who is/ are permanent member of the organization.	
30.	Certification		IEC62109-1, IEC62109-2 IEC accredited independent laboratory and Manufacturer's ISO 9001	
31.	Type test Certificate and ISO 9001 certificate verification link		Please list.	
32.	Catalogue		Manufacturer's catalogue to be submitted which is available on manufacturer's website.	

2.7 Submersible Pump:

Submersible Pump should be off the shelf, robust and corrosion resistant. All metal parts of the pumps should be made of AISI 304 grade stainless steel and should be compatible to any NEMA

standard motors available in the market. Pumps should be of highest efficiency and should comply with the following technical specifications:

Sl. No	Item Description	Unit	BREB Requirement					Bidders Guaranteed Values in relation to Manufacturer's Datasheet or Catalogue
1.	Pump Capacity	kW	2.2	4.0	5.5	7.5	11.0	
2.	Name Of the Manufacturer		Please specify					
3.	Address of the Manufacturing Unit		Please specify					
4.	Country of Manufacture		Please specify					
5.	Model No.		Please specify					
6.	Pump Construction		All metal parts should be corrosion proof AISI 304 standard or better quality stainless steel. Details of the pump constructional drawing with material specification to be provided.					
7.	Pump impeller Construction		Must be AISI 304 or better grade stainless steel					
8.	Min. rated water discharge capacity at TDH 3m	m^3/h	68	78	120	162	198	
9.	Min. rated water discharge capacity at TDH 6m	m^3/h	54	76	120	154	192	
10.	Min. rated water discharge capacity at TDH 10m	m^3/h	36	68	108	138	150	
11.	Pump discharge profile and Flow Chart		Manufacturer's Pump discharge profile, Flow Chart to be provided					
12.	Allowable min. Total Dynamic Head (TDH)	m	20					
13.	Min. delivery Pipe Diameter	inch	3	3	5	6	6	
14.	Adaptive well diameter	inch	6	6	8	10	10	
15.	Rated RPM		Please Specify					
16.	Sand content tolerance	gm/m^3	Min. 50					
17.	Average liquid water temperature	^0C	30					
18.	Pump and motor coupling Standard		NEMA					
19.	Warranty		Min. 5 Years					
20.	Manufacturer's Authorization and Warranty Certificate		Manufacturer's Authorization and Warranty certificate or declaration should be signed by the Owner/ President/ CEO/ Managing Director/ Director or					

Sl. No	Item Description	Unit	BREB Requirement	Bidders Guaranteed Values in relation to Manufacturer's Datasheet or Catalogue
			equivalent who is/ are permanent member of the organization.	
21.	Certification		CE and Manufacturer's ISO 9001	
22.	CE and ISO 9001 certificate verification link		Please provide link	
23	Catalogue		Manufacturer's catalogue to be submitted which is available on manufacturer's website.	

2.8 Submersible Motor:

Submersible Motor should be off the shelf, robust and corrosion resistant. All metal parts of the motor should be made of AISI 304 grade stainless steel and should be compatible to any NEMA standard Pump. Motors should be of highest efficiency so that it can produce rated power required to produce specified flow rates of the pumps as specified in the pump specification in item 4 and should comply with the following technical specifications:

Sl. No	Item Description	Unit	BREB Requirement					Bidders Guaranteed Values in relation to Manufacturer's Datasheet or Catalogue
1.	Capacity	kW	2.2	4.0	5.5	7.5	11.0	
2.	Name Of the Manufacturer		Please specify					
3.	Address of the Manufacturing Unit		Please specify					
4.	Country of Manufacture		Please specify					
5.	Model No.		Please specify					
6.	Pump and motor coupling Standard		NEMA					
7.	Ingress Protection Rating		IP68					
8.	Insulation Class		F					
9.	Nominal input voltage	VAC	380					
10.	No. of Phases		3, Delta					
11.	Nominal input frequency	Hz	50					
12.	Input voltage tolerance	%	±10					
13.	Max. water temperature	^{0}C	30					

Sl. No	Item Description	Unit	BREB Requirement	Bidders Guaranteed Values in relation to Manufacturer's Datasheet or Catalogue
14.	Lubricant		Water Lubrication is Preferred. In case of oil lubrication, it must be certified Non-Toxic oil (US, Japan, EU rated).	
15.	Motor body, shaft, upper cover and bottom end material		AISI 304 or better grade stainless steel	
16.	Motor Cable		Motor manufacturer have to provide min. 20m submersible cable connected with the motor.	
17.	Warranty		Workmanship Warranty: 5 Years Performance Warranty: 5 Years	
18.	Manufacturer's Authorization and Warranty Certificate		Manufacturer's Authorization and Warranty certificate or declaration should be signed by the Owner/ President/ CEO/ Managing Director/ Director or equivalent who is/are permanent member of the organization.	
15.	Certification		CE and Manufacturer's ISO 9001	
16.	CE and ISO 9001 certificate verification link		Please provide	
17.	Catalogue		Manufacturer's catalogue to be submitted which is available on manufacturer's website.	

2.9 PV (DC) Combiner Box:

PV (DC) Combiner Box shall be NEMA TYPE 4 OR IP65 grade rated. There shall be necessary size of dc string fuses for each positive string before connecting to the inverter. Each PV String must be protected by dc listed over current device such as a type-2 surge protection device (SPD). The negative terminals will be grounded. There should be a DC rated disconnect switch or Breaker between PV modules and the inverter. The PV combiner Box should have change over option so that the output of PV array can be directed to other applications like battery charging. PV combiners should comply with the following technical specifications:

Sl. No	Item Description	Unit	BREB Requirement	Bidders Guaranteed Values in relation to Manufacturer's Datasheet or Catalogue
1.	Warranty		Min. 5 Years	
2.	Drawing & Design		Please provide a concept drawing and enclosure specifications.	
3.	Catalogue		Manufacturer's catalogue to be submitted	

2.10 Cables and Connections:

System wiring shall be installed in accordance with the provisions of the Bangladesh electrical code. All Wiring shall be new and continuous for each wiring run; splices will not be acceptable. All wires should be labelled by the factory with the type of insulation, size of cable and the rating of the conductors as well as should comply with the following technical specifications:

Sl. No	Item Description	Unit	BREB Requirement					Bidders Guaranteed Values in relation to Manufacturer's Datasheet or Catalogue
1.	Name Of the Manufacturer		Please specify					
2.	Address of the Manufacturing Unit		Please specify					
3.	Country of Manufacture		Please specify					
4.	Model No.		Please specify					
5.	Cable Type		a) PV Module to Inverter: Outdoor graded and UV Protected Insulated Flexible Cable. b) Inverter to Pump: Water proof and submersible grade Flexible.					
6.	Conductor material		Copper					
7.	Pump Capacity wise Min. PV String Cable Cross Section	kW	2.2	4.0	5.5	7.5	11.0	
		mm^2	1.5	1.5	2.5	4.0	4.0	
8.	Rated voltage of the PV String Cable	VDC	1000					
9.	PV String Cable Conductor Assembly		Single Core					
10.	PV String Cable Laying		UV protected and long lasting PVC Channel or PVC Pipe. In case of crossing over all cables must be installed underground through PVC pipe and must be watertight.					
11.	PV String Cable Connection Type		MC4					
12.	Pump Capacity wise Min. Motor Cable Cross Section	kW	2.2	4.0	5.5	7.5	11.0	
		mm^2	1.5	1.5	2.5	4.0	6.0	
13.	Min. rated voltage of the Motor Cable	VAC	600					
14.	Motor Cable Conductor Assembly		4 core, Three phase and one Earth					

2.11 AC Circuit Breaker Box:

There must be a 3 phase AC circuit breaker box with appropriate current rating (125% of Load) of circuitbreakers between pump inverter and Pump Motor to protect pump motor from over current and over load. Protection should be provided against voltage and current surges as per Bangladeshi electrical code or equivalent requirements (e.g., NEC Article 690). There must be a

Type 3 surge protection Device (SPD) between Inverter and Circuit Breaker Box. The AC Circuit Breaker Box should have change over option so that the output of the inverter can be directed to other equivalent motor driven machinery like Rice Threshing machine, Rice husking machine etc. as well as should comply with the following technicals pecifications:

Sl. No	Item Description	Unit	BREB Requirement	Bidders Guaranteed Values in relation to Manufacturer's Datasheet or Catalogue
1.	Warranty		Min. 5 Years	
2.	Drawing & Design		Please provide a concept drawing and enclosure specifications.	

2.12 Grounding & Lightning Protection:

PV system grounding shall follow the requirements of the Bangladesh electric code (BNBC). A PV array and an equipment grounding system with resistance <1 ohm shall be designed and installed for the PV system. The grounding system shall provide personnel protection for step and touch potential.

All exposed non-current carrying metal parts shall be solidly bonded to ground, including the controller cabinet, array switch cabinet, module framework and assembly structure should be grounded by means of conductors. Contractor shall connect the PV system's ground with a single point ground. The ground electrode should be a copper rod not less than 5/8" (16 mm) diameter and 3 meters in length, buried vertically or at an angle of no more than 45 degrees off vertical. The connection bracket to the ground electrode should be resistant to corrosion (preferably be of copper or bronze). The equipment ground cable (in all cases) and of the system (if it applies) should be of bare copper or with green insulation, the gauge of which should not be smaller than the gauge of the largest conductor of the PV system. The ground circuit should (Negative) shall not contain any type of switch or fuse at any point. Provide surge protection for lightning on all electrical systems. Lightning rods are not required nor desired.

2.13 Inverter & Pump Housing:

The inverter and PV combiner box should be a ground mounted rust proof steel cabinet with a centre Split design (e.g. two doors) is to be provided for protecting the inverter and pump from the elements. The cabinet should be accessible in case of withdrawal of pumps for repair. An indicative design is provided in the drawing section of this document. The cabinet should be out door category with a minimum design life of 20 years. All nuts, bolts, washers used must be either hot deep galvanized or stainless steel. Cabinet should have adequate ventilation facility and finishing should be either marine grade aluminium alloy, or powder coated or galvanized steel.

Sl. No	Item Description	Unit	BREB Requirement	Bidders Guaranteed Values in relation to Manufacturer's Datasheet or Catalogue
1.	Warranty		Min. 5 Years	

Sl. No	Item Description	Unit	BREB Requirement	Bidders Guaranteed Values in relation to Manufacturer's Datasheet or Catalogue
2.	Drawing & Design		Please provide a detailed Concept Drawing indicating all dimensions and box specifications.	

2.14 PV Module Mounting Structure:

All structures, including array structures, shall be designed in accordance with all applicable Bangladeshi codes and standards. Array structures must have suitable evidence to show that the design is commensurate with a 25-yearlife. PV modules must be mounted to a solid and corrosion proof out door graded frame work made of hot deep galvanized or stainless steel or Aluminium. The mounting structure must be able to withstand sustained winds of 160 km/hour and have a design life time of 25 years adequate for the Bangladesh climate. The Contractor shall provide structural calculations, stamped by a licensed professional structural engineer. Calculations based on accepted engineering practices shall be supplied to show that the design of the entire array system (modules, panels, array structures, and foundations) will withstand a specific 160 km per hour basic winds peed/and or gusts, and other specified loads. All hardwares like nuts, bolts, base plates, anchor bolts etc shall be stainless steel or hot deep galvanized steel. The Ultimate Strength Method shall design all reinforced concrete structures. The Working Stress Method shall design structures and foundations of all other materials. All structures and foundations shall be designed for ductile behaviour.

Ground mounting: PV modules lowest level must be at least 1 meter above the ground.

Sl. No	Item Description	Unit	BREB Requirement	Bidders Guaranteed Values in relation to Manufacturer's Datasheet or Catalogue
1.	Brand of Pipe/Angle/Cement		Please specify	
2.	Model of Pipe/Angle/Cement		Please specify	
3.	Standard of Steel		Angles & Channels: ASTM 572 Grade 50 and ISO 630 Grade 345 Pipe: BS 1387/ BDS 1031 & BS 729 Rod: BS 4449 Grade 500 and BDS ISO 6935-2 Grade 500W	
4.	Certification		BUET or equivalent laboratory test report of steel materials offered and Manufacturer's ISO 9001	
5.	Warranty		Min. 5 years	

Sl. No	Item Description	Unit	BREB Requirement	Bidders Guaranteed Values in relation to Manufacturer's Datasheet or Catalogue
6.	Design & Drawing		Detail design, drawing of RCC & Steel structure to be provided with the bid if bidder chose to offer different design. The drawing should specifically indicate the dimensions including diameter and thickness of RCC structure rod, pipe, angle, nut, bolts etc. Design must be done and signed by qualified and experienced B. Sc Civil/structural engineer and should include the contact information (mobile and email) of the designer.	

2.15 Tube-well:

Each pump shall have underground tube-well made of PVC housing pipe and PVC strainer pipe. Necessary amount of gravel packing to be provided so that adequate water supply remains available without significant drawdown during water extraction from the well. Contractor shall ensure tube-well remains perfectly vertical and use necessary number of centralizers. Tube-well design should be such that it can perform 20 years without any trouble. Contractor shall be responsible for all sort of performance issues during first 5 years of warranty period which shall include constructional defects, drawdown impacts as well as water flow requirements and it shall comply with the following technical specifications:

Sl. No	Item Description	Unit	BREB Requirement					Bidders Guaranteed Values in relation to Manufacturer's Datasheet or Catalogue
1.	Name Of the Pipe Manufacturer		Please specify					
2.	Address of the Pipe Manufacturing Unit		Please specify					
3.	Country of Pipe Manufacture		Please specify					
4.	Model of Pipe.		Please specify					
5.	Pump Sizes	kW	2.2	4.0	5.5	7.5	11.0	
6.	Min. Tube-Well diameter	inch	6	6	8	10	10	
7.	Approximate Length of Tube-Well	ft	80	80	100	110	120	
8.	Approximate Length of Blind/Housing Pipe (ft)	ft	40	40	60	70	80	
9.	Approximate Length of Strainer/filter Pipe (ft)	ft	40	40	40	40	40	

Sl. No	Item Description	Unit	BREB Requirement					Bidders Guaranteed Values in relation to Manufacturer's Datasheet or Catalogue
10.	Diameter of Blind/Housing Pipe (inch)	inch	6	6	8	10	10	
11.	Diameter of Strainer/filter Pipe (inch)	inch	6	6	8	10	10	
12.	Min. Drilled Bore hole diameter (mm)	mm	Tube-well diameter + 150					
13.	Min. Number of Centralizers		4					
14.	Pipe Material		PVC					
15.	Min. Class of PVC Blind/Housing Pipe and Strainer		B	B	C	D	D	
16.	Brand of Blind/Housing pipe, strainer Pipe and accessories		Please Specify					
17.	Model of Blind/Housing pipe, strainer Pipe and accessories		Please Specify					
18.	Certification		BUET or equivalent third party laboratory test report and Manufacturer's ISO 9001:2008					
19.	Warranty		Min. 5 years					
20.	Design & Drawing		Detail design, drawing of Each type of boring to be provided with the bid. The drawing should specifically indicate the dimensions including diameter, thickness type of pipe, socket, end cap, nut, bolts etc. Design must be done and signed by qualified min 5 years experienced B. Sc Civil/ Structural/ Agri-Engineer engineer and should include the contact information (mobile and email) of the designer.					

2.16 Underground water distribution line/Buried Pipeline:

Each pump system shall have underground water distribution line/Buried Pipeline made of PVC pipe to reduce water losses during distribution. Design should facilitate leak proof long lasting service for at least 20 years. Contractor shall be responsible for all sorts of performance issues during first 5 years of warranty period, which shall include constructional defects, water clogging impacts etc as well as water flow requirements and it shall comply with the following technical specifications:

Sl. No.	Item Description	Unit	BREB Requirement					Bidders Guaranteed Values in relation to Manufacturer's Datasheet or Catalogue
1.	Name Of the Pipe Manufacturer		Please specify					
2.	Address of the Pipe Manufacturing Unit		Please specify					
3.	Country of Pipe Manufacture		Please specify					
4.	Model of Pipe.		Please specify					
5.	Pump Sizes	kW	2.2	4.0	5.5	7.5	11.0	
6.	Diameter of distribution pipe line (Inch)	inch	6	6	8	10	10	
7.	Length of distribution pipe line (ft)	ft	600	800	1400	1600	2000	
8.	Type of Pipe		PVC					
9.	Class of Pipe		At least "Class B"					
10.	No. of Gate Valve (Approximate)	inch	2					
11.	No. of outlet valve (Approximate)	inch	3	4	7	8	10	
12.	Socket, Elbow and T material Type	mm	GI/PVC					

2.17 Fencing with gate:

Each pump system shall have barbed wire fencing to protect it from unauthorized access as well as to protect from animals like cows, goats etc. Fencing materials should be such that it shall be defect free for at least for 5 years. Barbed wires should be rust free at least for 5 years. Contractor shall be responsible for rust and other defects, which are the result of poor material and replace them during 5 years warranty period. It shall comply with the following technical specifications:

Sl. No	Item Description	Unit	BREB Requirement	Bidders Guaranteed Values in relation to Manufacturer's Datasheet or Catalogue
1.	Type of Fencing		Barbed wire	
2.	Barbed wire material Type		Rust free long lasting GI	
3.	Distance between barbed wires	Inch	6	
4.	Fencing RCC Pillar/pole dimension		6 inch x 6 inch x 7 feet with necessary barbed wire clamps	
5.	Base of Fencing Pillar/pole		2' x 2' x 6", RCC casting, 6" sand filling under base, 3" brick soiling underneath	
6.	Gate RCC Pillar/pole dimension		10" x 10" x 5' RCC casting	

Sl. No	Item Description	Unit	BREB Requirement	Bidders Guaranteed Values in relation to Manufacturer's Datasheet or Catalogue
7.	Base of Gate RCC pillar		3' x 3' x 2', 6" RCC casting	
8.	Width of gate		4 feet	
9.	Gate Material		MS Angle and rod with painted finish	
10.	Warranty		Min. 5 years	

2.18 Operations & Maintenance (O&M) Manual:

The Contractor shall provide a detailed operation and maintenance manual written in Bengali and English Language including diagram of system components, description of normal operation; description of operational indicators and normal status of each, table of modes of operation, safety considerations, preventative maintenance requirements, troubleshooting and corrective actions; sources of spare parts and cut-sheets for all components. Procedures for proper system operation, including a list of load limitations and any problem loads. These procedures should include suggested operation, including load conservation, during periods of inclement weather, and/or a low voltage disconnect event. The manual shall delineate all routine maintenance requirements and contain instructions on how to perform all required work. The manual shall cover the following topics:

a) Equipment Descriptions: Major system components (modules, inverters, Pump & Motor) Specifications of all components (Electrical, Mechanical & Civil)
b) Theory of operating principle of the pump system
c) Operating procedure of pump system
d) Automatic operation
e) Manual Operation
f) Solar tracking (if Used)
g) Routine maintenance schedule
h) Service and Repair
i) Replacement of PV modules
j) Fault diagnosis
k) Tracking errors
l) Calling for service
m) Appendices:
   A. – List of Recommended spare parts
   B. – List of Special equipment and tools
   C. – Maintenance record format
   D. – Post installation testing & Commissioning data
   E. – As built drawings (Electrical, Mechanical and Civil)

The Contractor shall prepare two (2) hardcopies and two (2) soft copies (e.g., CDs or flash drives) containing the Operation & Maintenance Manual.

2.19 Demonstration and Training:

The Contractor shall Conduct two-day training for farmers, BREB/PBS technicians or designated personnel (approximate 370 Persons) on operation and maintenance of the installed SWPs.. Explain the system operating principles, load management requirements, required maintenance checks and how to conduct them. Also explain the entire Solar Pumping System, including operation and maintenance of controllers, inverters, transfer switches, panel board, disconnects and other features as requested by BREB/PBS. Presentations should be made in Bangla. Please include drawings and diagrams.

Provide instructions on removal and installation of panels and inverters, including wiring and all connections.

Provide written instructions and procedures for shut-down and start-up activities for all components of the system.

Include a brief description of each one of the components of the system and its function, procedures for the adequate operation of the system, including a list of the limitations on the working load and potential problems.

Clearly indicate how many hours a week each piece of equipment can be used. The relation between the available daily energy and the conditions of the solar resource should be clearly explained.

Indicate safety issues and what should NOT be done to the SWP.

Provide recommendations about what to do in cases of emergency such as: electric storms, floods, etc.

Explain troubleshooting guide and procedures.

Provide instructions on PV module cleaning and maintenance procedure.

Provide clear instructions on safety precaution

Indicate who to contact for what types of problems. The Contractor shall remain available by telephone and email to provide consultation to the Owner on the system (including PCU/INVERTER) malfunctions during the warranty period.

2.20 Reporting:

The supplier shall have to submit performance data reports yearly to PBS and BREB which shall have to be signed/ approved by the pump system owner.

a) Total run time of the pump.
b) Total delivery of water.
c) Farmer's land coverage amount
d) Farmer's comments on the pump's performance.

2.21 Penalty:

The supplier shall be penalized in case of failure to ensure the scope of maintenance and post sales service mentioned in item 17 as described in PCC 28.3 (c) of Section 8: Particular Conditions of Contract.

2.22 Special Instruction:

a) All exposed metal items like nut, bolt, clamp, angle, pipe, washer, base plate, boxes, cabinets, fencing wire etc shall be of aluminium alloy or stainless steel or hot deep galvanized. Any joints made of arc welding also have to be of either stainless steel or hot deep galvanized type.
b) Inverters with plastic body shall be rejected.
c) Inverter itself has to be NEMA TYPE 6 rated or IP65 rated.

3. Drawings

Package Name: Design, Supply, Installation and Commissioning of SPV Pumping System in Rangpur PBS-2.

Package No. SPIP-W-2

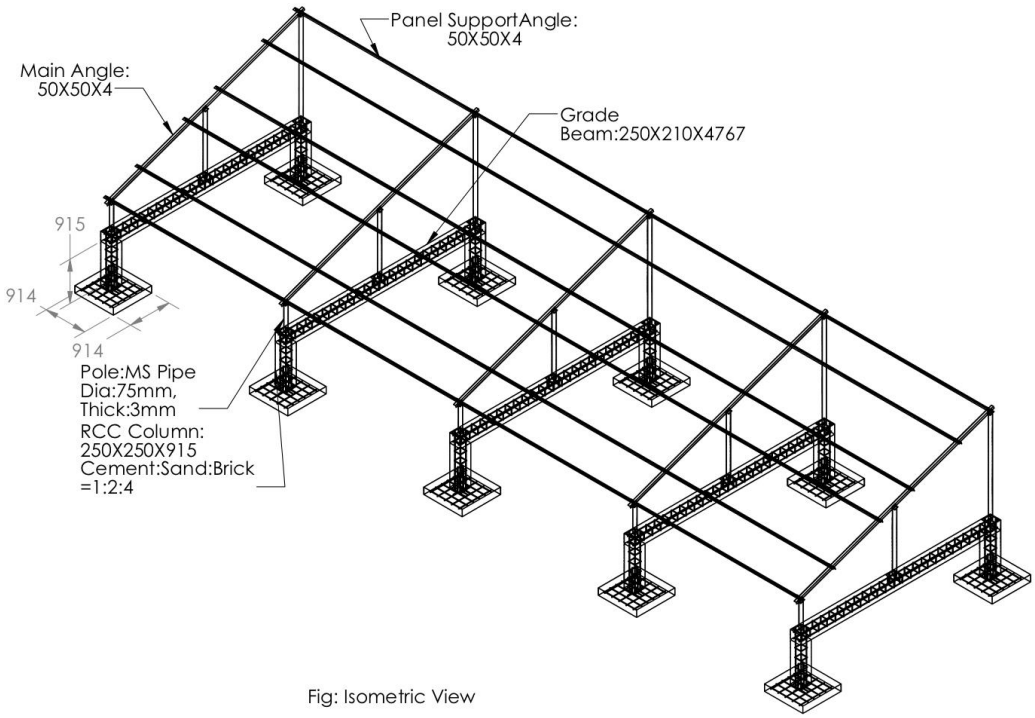

Figure 1: Isometric view of PV Module Mounting Structure

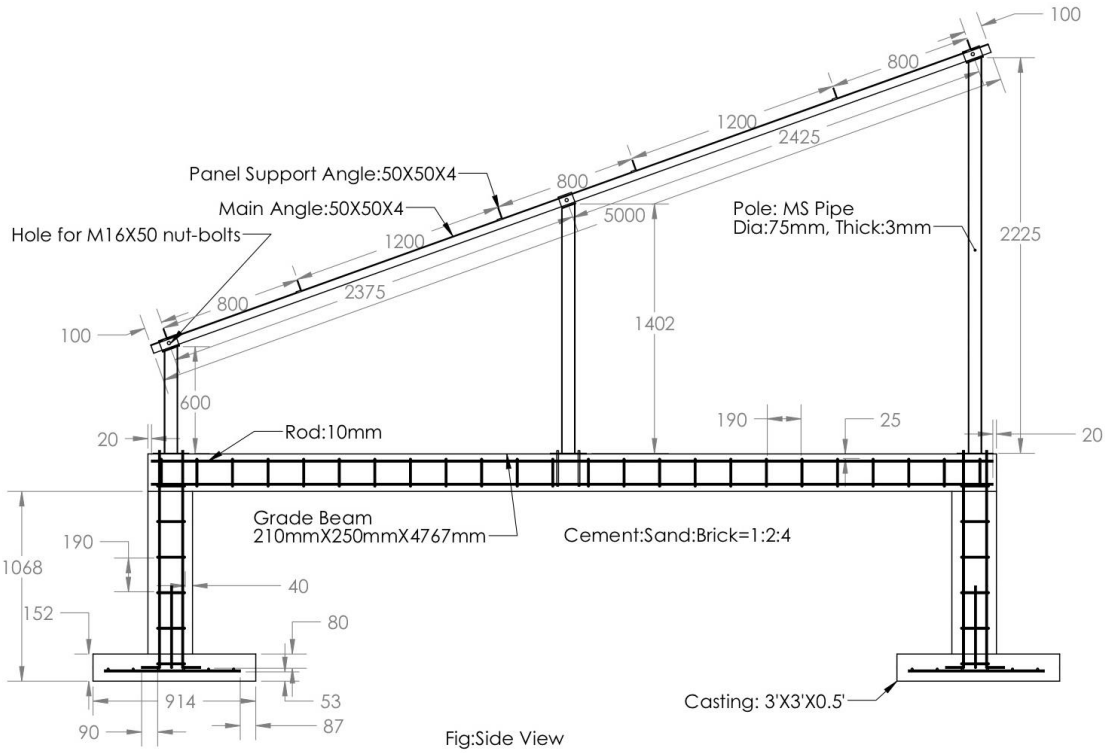

Figure 2: Side view of the solar PV Module

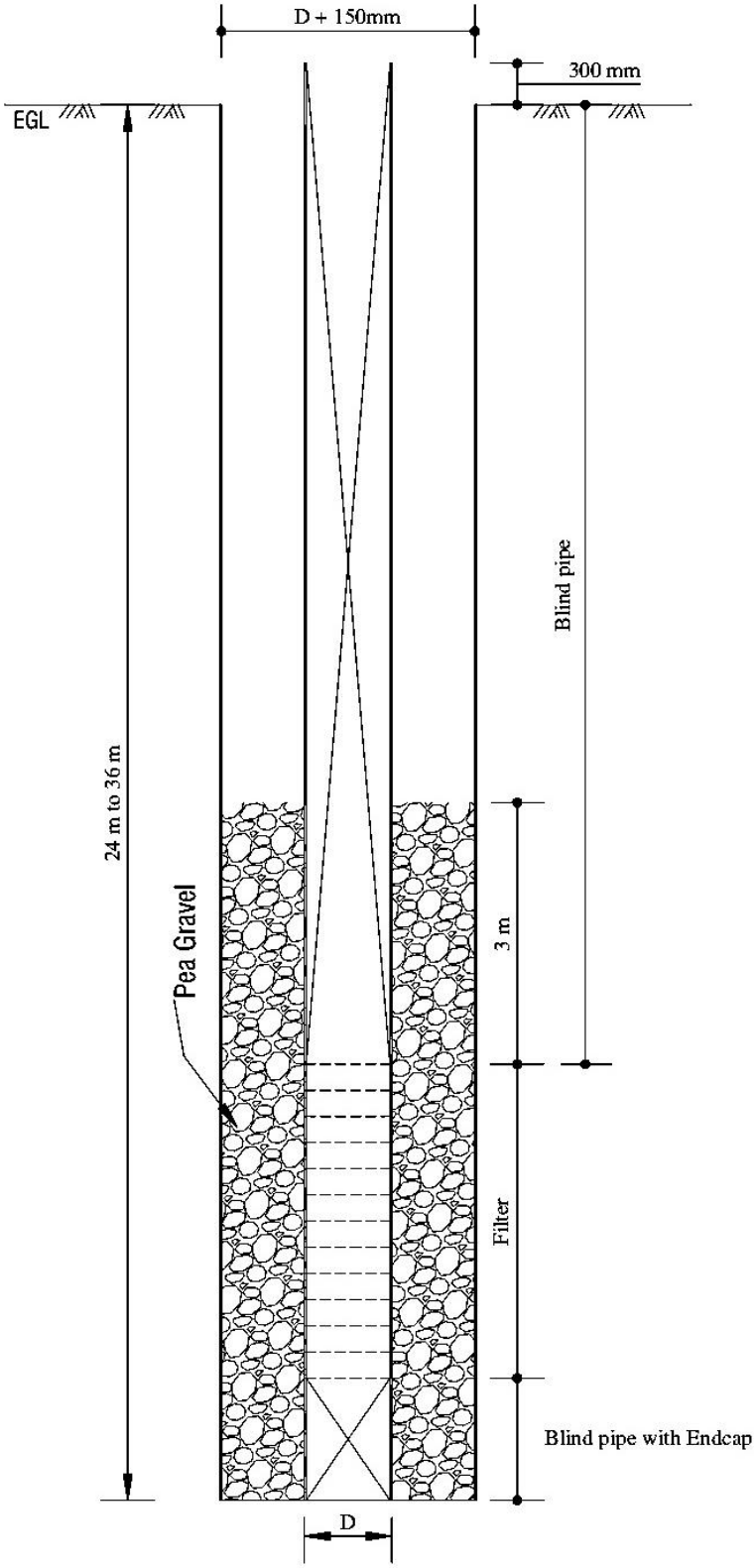

Figure 3 Tube-well details

Pump Sizes	kW	2.2	4.0	5.5	7.5	11.0
Min. Tube-Well diameter	inch	6	6	8	10	10

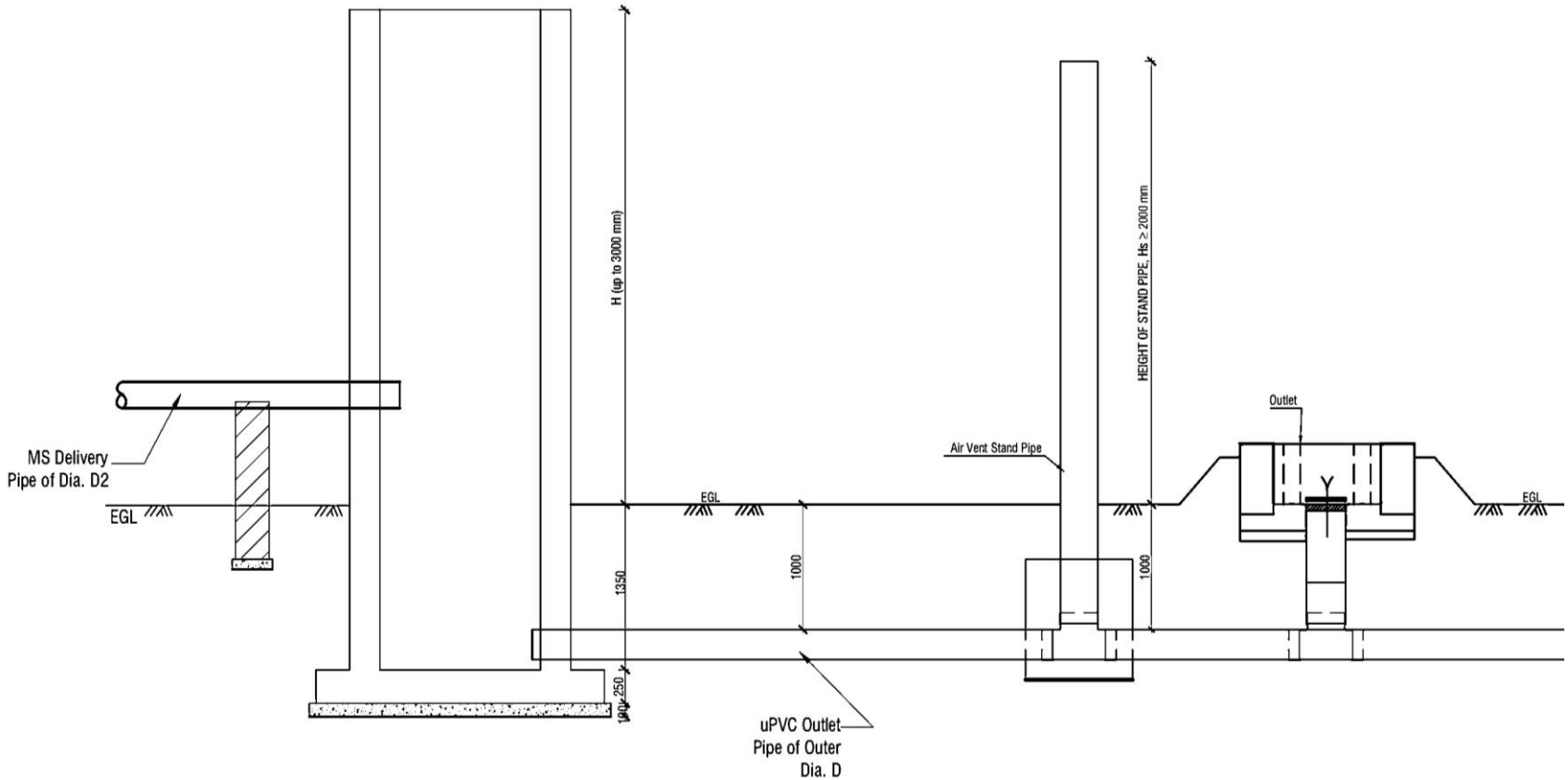

Figure 4 Sectional elevation of buried pipeline with header tank and vent pipe (option 1)

Pump Sizes	kW	2.2	4.0	5.5	7.5	11.0
Diameter of distribution pipe line (Inch)	inch	6	6	8	8	8
Length of distribution pipe line (ft)	ft	600	800	1400	1600	2000

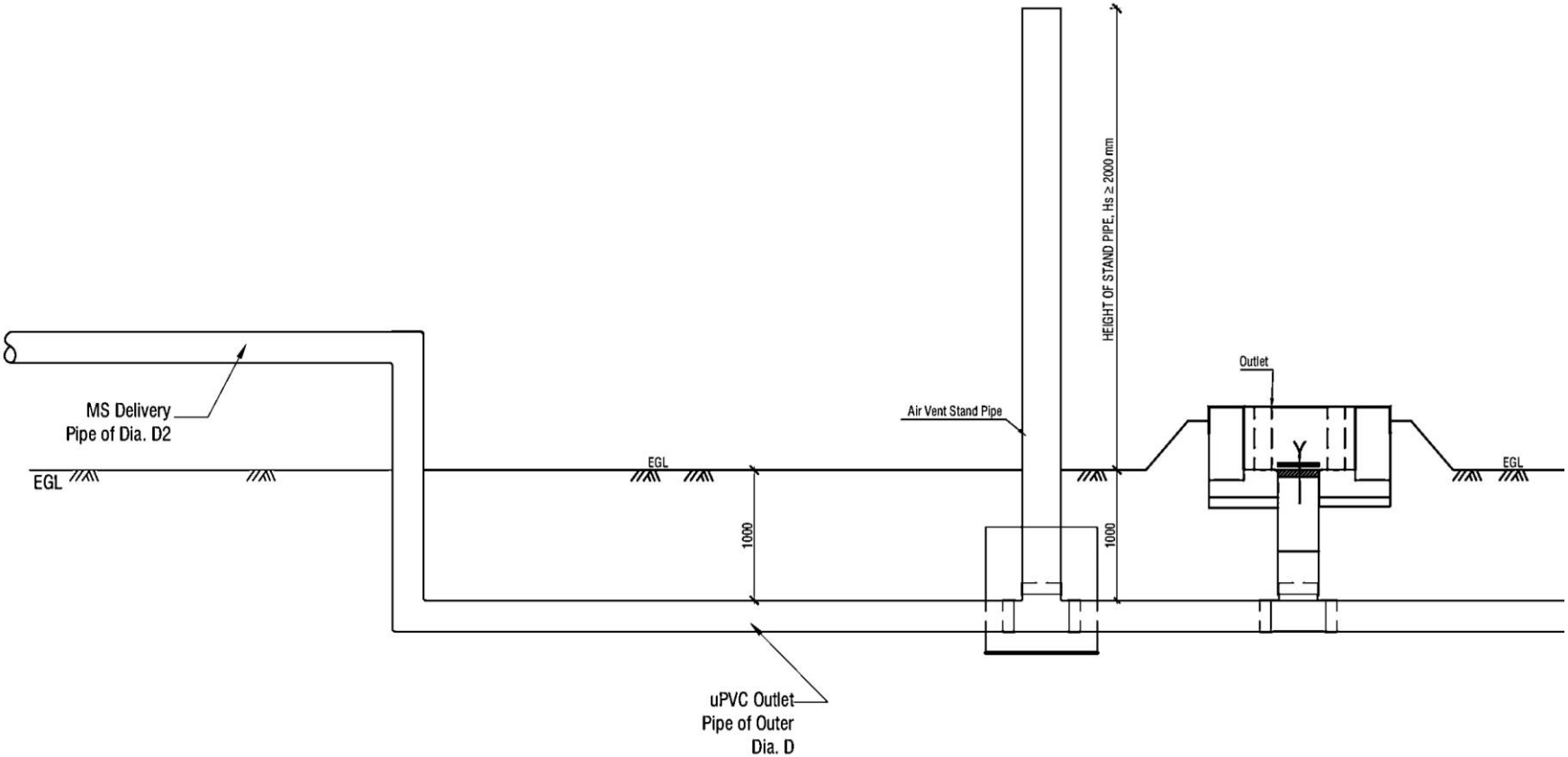

Figure 5 Sectional elevation of buried pipeline without header tank and vent pipe (option 2)

Pump Sizes	kW	2.2	4.0	5.5	7.5	11.0
Min. Diameter of distribution pipe line (Inch)	inch	6	6	8	8	8
Length of distribution pipe line (ft)	ft	600	800	1400	1600	2000

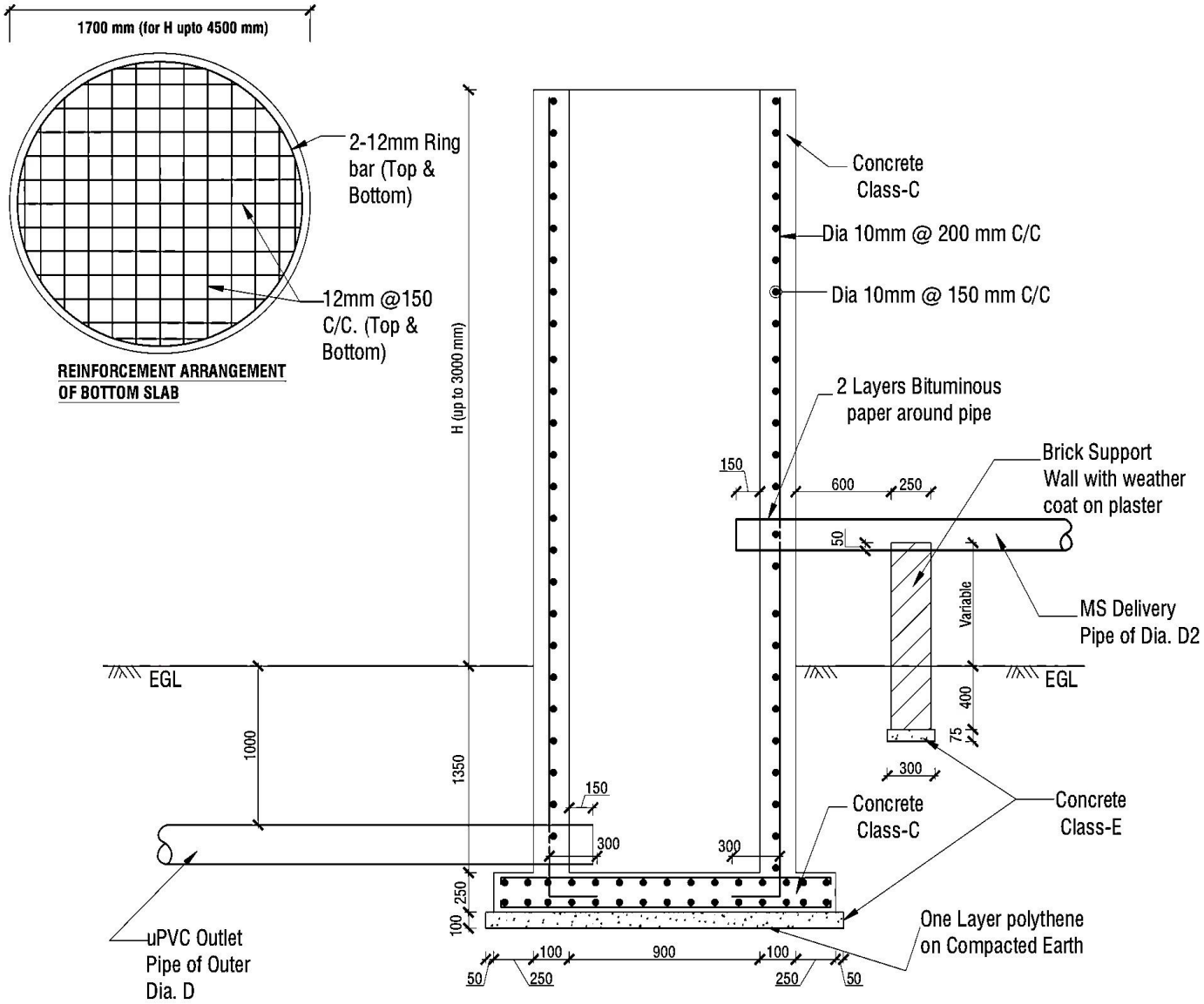

Figure 6 Sectional elevation of header tank

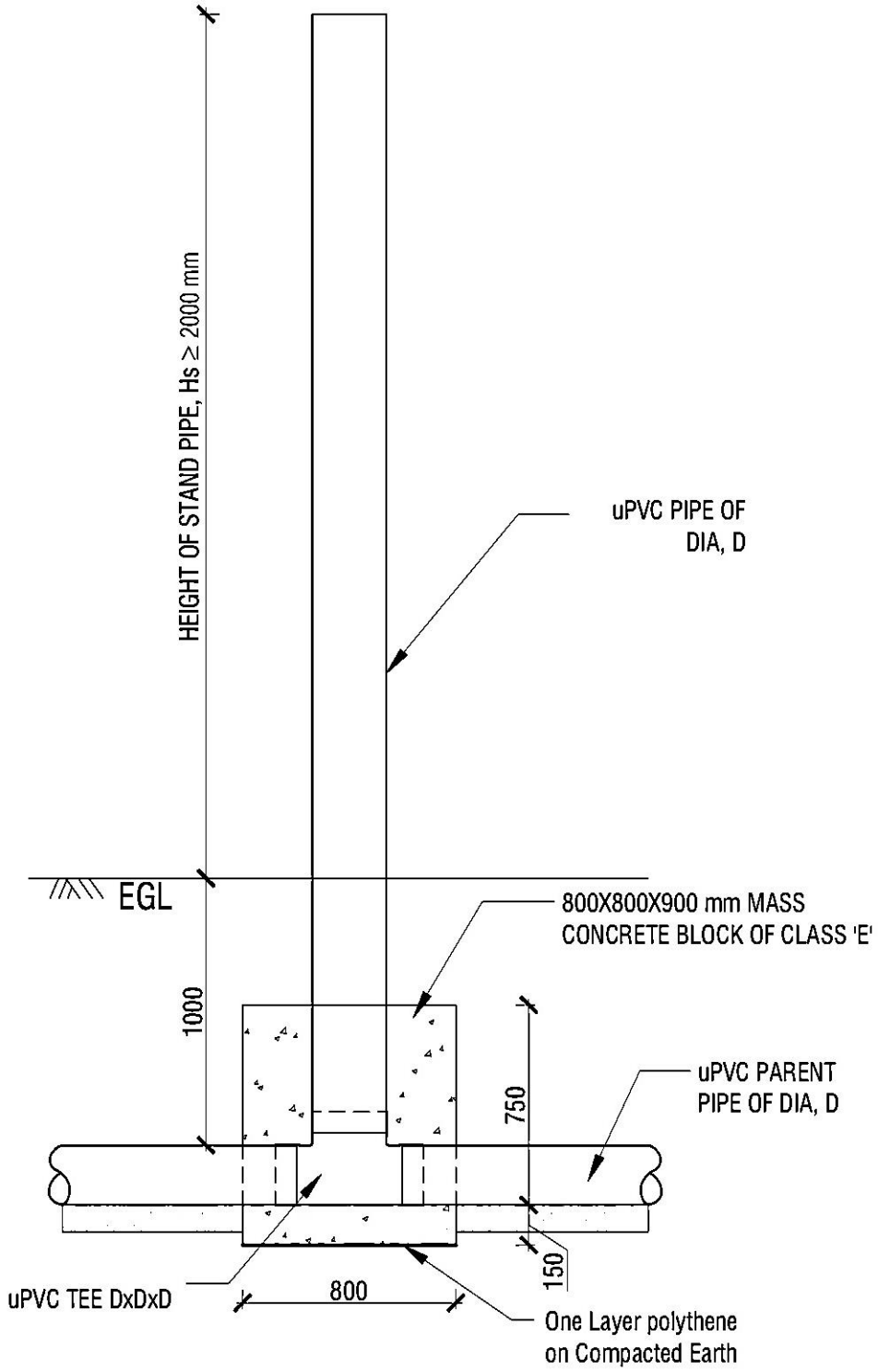

Figure 7 Sectional elevation of air vent pipe

Pump Sizes	kW	2.2	4.0	5.5	7.5	11.0
Min. Diameter of Stand (vent) pipe (Inch)	inch	6				

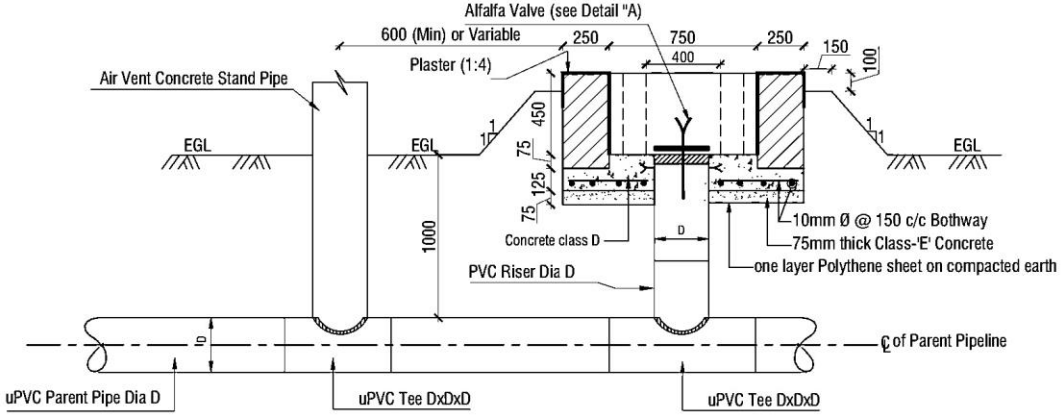

SECTION OF DISCHARGE BOX A-A (Type-1)

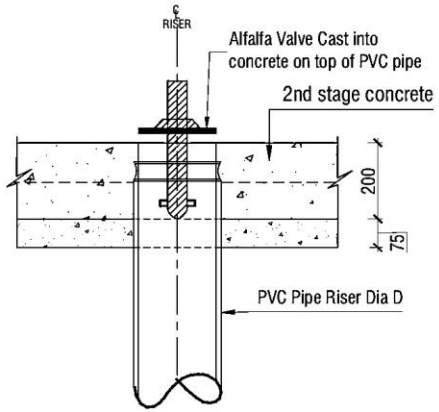

DETAIL A

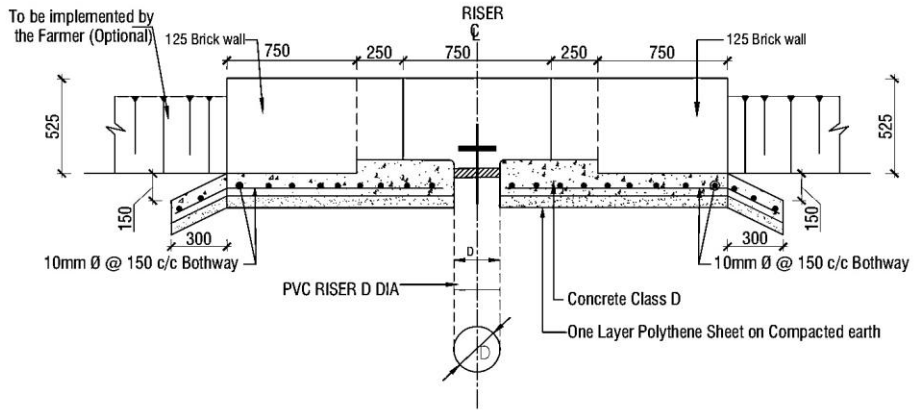

SECTION OF DISCHARGE BOX B-B (Type-1)

Figure 8 Sectional View of outlet (Option-1)

Pump Sizes	kW	2.2	4.0	5.5	7.5	11.0
Min. Diameter of Riser pipe	inch	6	6	8	8	8

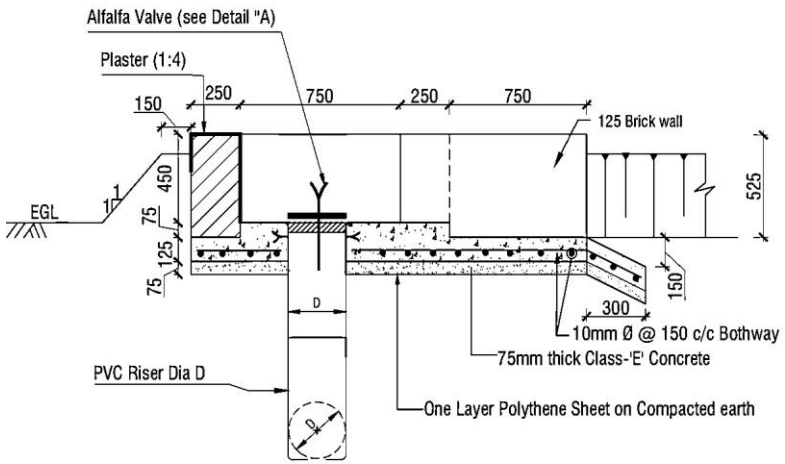

SECTION OF DISCHARGE BOX A-A (Type-2)

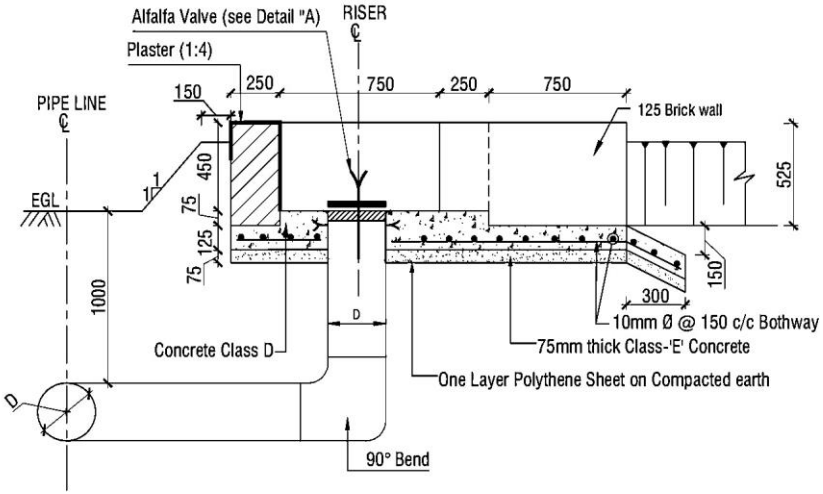

SECTION OF DISCHARGE BOX B-B (Type-2)

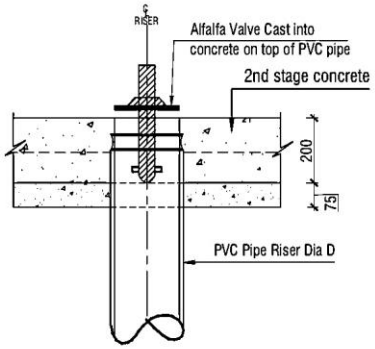

DETAIL A

Figure 9 Sectional view of outlet (Option-2)

Pump Sizes	kW	2.2	4.0	5.5	7.5	11.0
Min. Diameter of Riser pipe	inch	6	6	8	8	8

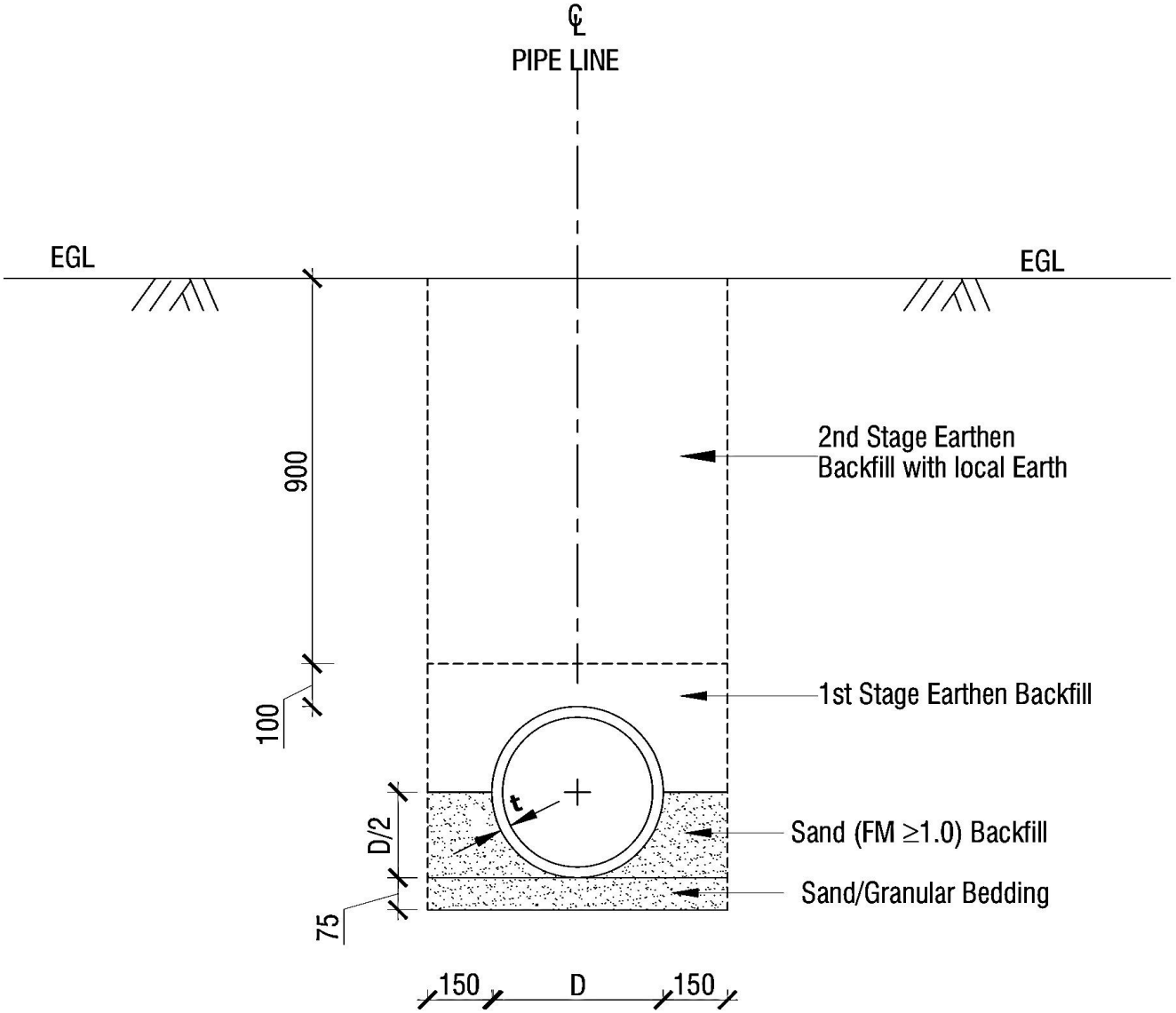

Figure 10 Trench of Pipeline

3.1 Construction Drawings

After bid award, the Contractor shall provide drawings for each discipline required (structural, electrical, Mechanical etc.), with separate plans for new work and site preparation, as well as special types of drawings where necessary.

Awarded Contractor shall provide drawings which indicate project title, project number, array identification and location, firm, firm's address and phone number, contract number, drawing title, drawing type, drawing number, and key plan. A cover sheet shall be provided and shall include a list of the drawings and maps. Each A/E submission shall be clearly dated and labeled(e.g. ~70% Design Development Submission, 100% Check Set Submission, Construction Document Submission, As-Built Drawings, etc.). Each drawing sheet submitted shall include a graphic scale in the lower right-hand portion of the sheet. A registered engineer shall stamp the final set. At a minimum, the following drawings are required:

- PVPS system plan layout
- Electrical plans – including single line diagram
- Electrical details.
- Array support and mounting details.
- Any drawings that may be required to install a complete project.
- Detail Fencing layout
- Details buried pipeline layout
- Inverter and Pump Housing

3.2 Shop Drawings/ Product Data:

3.2.1 Submissions: The Contractor shall submit shop drawings and product data, submittals, catalog cuts, etc. as stipulated in these specifications. Shop drawing and product data submissions to BREB shall be made after review and approval. The Contractor shall combine all product data submission material into hard copy manuals for reference during all phases of construction. Shop drawings shall be bound with product data.

3.2.2 Reviews: Reviews of shop drawings and product data by the Owner are not to be interpreted as an approval of the Contractor's product selections. The Contractor shall remain completely responsible for constructing the PV Pumping System in accordance with all contract performance requirements.

3.2.3 Products for Submission: The Contractor shall provide shop drawings and product data for all systems, equipment and materials.

3.3 Record Drawings:

The Contractor shall maintain on site the working record drawings of all changes/ deviations from the original design. Marked-up drawings shall always be maintained at the Contractor's on site construction office, available for BREB to review. Record drawings shall note related change order designations on impacted work. When shop drawings indicate significant variations over design drawings, shop drawings may be incorporated as part of record drawings. Review of record drawings may be required before monthly payments can be processed.

3.4 As-Built Drawings and Specifications:

Finalize record drawings and manuals, indicating all "as-built" conditions. The Contractor shall provide "as-built drawings" and documents based upon actual site installation. Should BREB determine that variations exist between finished construction and the as-built drawings, the Contractor shall correct drawings to the satisfaction of BREB.

The Contractor shall submit two (2) hard copies and two (2) soft copies (CD or flash drive) containing the "as-built" drawings and specifications as CAD and PDF files.

4. Supplementary Information

Package Name: Design, Supply, Installation and Commissioning of SPV Pumping System in Rangpur PBS-2.

Package No. SPIP-W-2

4.1 Inspection and Tests:

4.1.1 General: The Contractor shall perform inspections and tests to certify performance throughout the construction process including: existing conditions/needs assessments, construction installation placement/qualification measurements and final inspections/tests performance certification. Periodic "quality" inspections shall also be conducted to support progress payments as identified in the Contractor's QCP.

4.1.2 Pre-shipment Inspection: During pre-delivery/ pre-shipment inspection; BREB nominated personnel (a team of 2-3 persons) will witness the routine test of Solar PV Module, MPPT Pump Inverter, Pump and Pump motor of not less than 10% of total quantity ready for delivery on random sampling basis (sample selected by the inspection team) during factory test in manufacturer's factory premises. The contractor shall bear all costs and expenses incurred in connection with such attendance including, but not limited to, all traveling and board and lodging expenses according to the existing government rules and regulations.

At a minimum, the PV Module, pump and inverter shall be tested to demonstrate that all major features, controls, protective functions, and instrumentation perform as designed. Testing of major pieces of electrical equipment and components shall be in accordance with applicable Standards. The test results shall be submitted to the Bangladesh Rural Electrification Board (BREB) and PBS.

Factory testing shall include a burn-in test of the inverter, Flow rate test of the pump and rated power capacity of the pump motor. For this test, pump and inverter shall be operated at full rated power output for one continuous eight (8) hour period. This test shall be performed at an elevated temperature (site maximum temperatures). If full power testing is not possible at the testing facility, each of the bridges, or power segments, may be tested independently at rated capacity for eight (8) hours.

A factory test plan that includes demonstration of all operational requirements including protective trips and a factory test report shall be submitted.

The Owner reserves the right to witness any or all factory tests.

4.2 Final Inspections and Tests:

In order to ensure compliance with provisions, an inspection by Project Director/BREB nominated solar PV system experts is mandatory after construction is complete. Unless otherwise identified, manufacturer recommendations shall be followed for all inspection and test procedures.

Tests shall include a commissioning of the array to certify performance. Commissioning tests shall conform with the requirements in the QCP. Commissioning shall be performed for the entire PV system. This data shall be used to confirm proper performance of the PV system.

4.3 Documentation:

Inspections/tests required in the QCP shall result in a written record of data/observations. The Contractor shall provide two (2) copies of documents containing all test reports/findings. Test results shall typically include: item/system tested, location, date of test, test parameters/measured

data, state of construction completion, operating mode, Contractor inspector/BREB witness, test equipment description and measurement technique.

4.4 Acceptance and Performance Testing:

After completion of the installation Contractor shall test the pumps in front of BREB/PBS representative and Consultant's representative. Once the testing is over and satisfactory, Contarctor shall commission the pump to the owner. Contractor must submit completion certificates from the owner and approved by BREB/PBS representative as well as Consultant's representative.

5. Certificates

Package Name: Design, Supply, Installation and Commissioning of SPV Pumping System in Rangpur PBS-2.

Package No. SPIP-W-2

5.1 Equipment Certifications

5.1.1 Required: IEC 61730 or UL 1703 PV Module listing
5.1.2 Recommended: IEC 61701 PV Module Salt Mist Corrosion Test
5.1.3 Recommended: IEC 62804 PV Module Potential Induced Degradation Test or equivalent PID certificates.
5.1.4 IEC 61215 / UL 1703 / IEEE 1262 Recommended Practice for Qualifications of PV Modules
5.1.5 IEC62109-1, IEC62109-2 Standard for Pump Inverters

5.2 Form of Completion Certificate

Contract: [. . . . *insert name of contract and contract identification details.* . . . .]

Date: .....

Certificate No.: .....

To:[. . . . *insert name and address of contractor.* . . . .]

Dear Ladies and/or Gentlemen,

Pursuant to GCC Clause 24 (Completion of the Facilities) of the General Conditions of the Contract entered into between yourselves and the Employer dated [. . . . .*insert date.* . . . .], relating to the [. . . .*brief description of the Facilities* . . . .], we hereby notify you that the following part(s) of the Facilities was (were) complete on the date specified below, and that, in accordance with the terms of the Contract, the Employer hereby takes over the said part(s) of the Facilities, together with the responsibility for care and custody and the risk of loss thereof on the date mentioned below.

1. Description of the Facilities or part thereof: [. . . .*description* . . . .]

2. Date of Completion: [. . . .*date* . . . .]

However, you are required to complete the outstanding items listed in the attachment hereto as soon as practicable.

This letter does not relieve you of your obligation to complete the execution of the Facilities in accordance with the Contract nor of your obligations during the Defect Liability Period.

Very truly yours,

[. . . .*Signature* . . . .]

Project Manager

5.3 Form of Operational Acceptance Certificate

Contract: [. . . . *insert name of contract and contract identification details.* . . . .]

Date: .....

Certificate No.: .....

To: [. . . . *insert name and address of contractor.* . . . .]

Pursuant to GCC Subclause 25.3 (Operational Acceptance) of the General Conditions of the Contract entered into between yourselves and the Employer dated [. . .*date.* . .], relating to the [. . .*brief description of the facilities.* . .], we hereby notify you that the Functional Guarantees of the following part(s) of the Facilities were satisfactorily attained on the date specified below.

1. Description of the Facilities or part thereof: [. . . *description* . . .]

2. Date of Operational Acceptance: [. . . *date* . . .]

This letter does not relieve you of your obligation to complete the execution of the Facilities in accordance with the Contract nor of your obligations during the Defect Liability Period.

Very truly yours,

[. . . .*Signature* . . . .]

Project Manager

6. Change Orders

Package Name: Design, Supply, Installation and Commissioning of SPV Pumping System in Rangpur PBS-2.

Package No. SPIP-W-2

6.1 Change Order Procedure
6.1.1 General
6.1.2 Change Order Log
6.1.3 References for Changes

6.2. Change Order Forms
6.2.1 Request for Change Proposal
6.2.2 Estimate for Change Proposal
6.2.3 Acceptance of Estimate
6.2.4 Change Proposal
6.2.5 Change Order
6.2.6 Pending Agreement Change Order
6.2.7 Application for Change Proposal

6.1. Change Order Procedure

6.1.1 General

This section provides samples of procedures and forms for implementing changes in the Facilities during the performance of the Contract in accordance with GCC Clause 39 (Change in the Facilities) of the General Conditions.

6.1.2 Change Order Log

The Contractor shall keep an up-to-date Change Order Log to show the current status of Requests for Change and Changes authorized or pending. Entries of the Changes in the Change Order Log shall be made to ensure that the log is up-to-date. The Contractor shall attach a copy of the current Change Order Log in the monthly progress report to be submitted to the Employer.

6.1.3 References for Changes

(1) Request for Change as referred to in GCC Clause 39 shall be serially numbered CR-X-nnn.

(2) Estimate for Change Proposal as referred to in GCC Clause 39 shall be serially numbered CN-X-nnn.

(3) Acceptance of Estimate as referred to in GCC Clause 39 shall be serially numbered CA-X-nnn.

(4) Change Proposal as referred to in GCC Clause 39 shall be serially numbered CP-X-nnn.

(5) Change Order as referred to in GCC Clause 39 shall be serially numbered CO-X-nnn.

Note:

(a) Requests for Change issued from the Employer's Home Office and the Site representatives of the Employer shall have the following respective references:

Home Office	CR-H-nnn
Site	CR-S-nnn

(b) The above number "nnn" is the same for Request for Change, Estimate for Change Proposal, Acceptance of Estimate, Change Proposal and Change Order.

6.2 Change Order Forms

6.2.1 Request for Change Proposal Form

[*Employer'sletterhead*]

To: [*Contractor's name and address*] Date:

Attention: [*Name and title*]

Contract Name: [*Contract name*]
Contract Number: [*Contract number*]

Dear Ladies and/or Gentlemen:

With reference to the captioned Contract, you are requested to prepare and submit a Change Proposal for the Change noted below in accordance with the following instructions within [*number*] days of the date of this letter[or on or before (*date*)].

1. Title of Change: [*Title*]
2. Change Request No./Rev.: [*Number*]
3. Originator of Change:
   Employer: [Name]
   Contractor (by Application for Change Proposal No. [Number Refer to Annex 6.2.7])
4. Brief Description of Change: [*Description*]
5. Facilities and/or Item No. of equipment related to the requested Change: [*Description*]
6. Reference drawings and/or technical documents for the request of Change:
   Drawing No./Document No. *Description*
7. Detailed conditions or special requirements on the requested Change: [*Description*]
8. General Terms and Conditions:
   (a) Please submit your estimate showing what effect the requested Change will have on the Contract Price.
   (b) Your estimate shall include your claim for the additional time, if any, for completing the requested Change.
   (c) If you have any opinion that is critical to the adoption of the requested Change in connection with the conformability to the other provisions of the Contract or the safety of the Plant or Facilities, please inform us in your proposal of revised provisions.
   (d) Any increase or decrease in the work of the Contractor relating to the services of its personnel shall be calculated.
   (e) You shall not proceed with the execution of the work for the requested Change until we have accepted and confirmed the amount and nature in writing.

[*Employer'sname*]
[*Signature*]
[*Name of signatory*]
[*Title of signatory*]

6.2.2 Estimate for Change Proposal Form

[*Contractor'sletterhead*]

To: [*Employer's name and address*] Date:

Attention: [*Name and title*]

Contract Name: [*Contract name*]
Contract Number: [*Contract number*]

Dear Ladies and/or Gentlemen:

With reference to your Request for Change Proposal, we are pleased to notify you of the approximate cost to prepare the below-referenced Change Proposal in accordance with GCCSubclause 39.2.1 of the General Conditions. We acknowledge that your agreement to the cost of preparing the Change Proposal, in accordance with GCCSubclause 39.2.2, is required before estimating the cost for change work.

1. Title of Change: [*Title*]
2. Change Request No./Rev.: [*Number*]
3. Brief Description of Change: [*Description*]
4. Scheduled Impact of Change: [*Description*]
5. Cost for Preparation of Change Proposal: [*insert costs, which shall be in the currencies of the contract*]

(a)	Engineering			(Amount)
	(i)	Engineer	_____hours (hrs) x _ rate/hr =	_____
	(ii)	Draftsperson	_____hrs x _____ rate/hr =	_____
		Sub-total	_____hrs	_____
		Total Engineering Cost		_____
(b)	Other Cost			_____
	Total Cost (a) + (b)			_____

[*Contractor'sname*]
[*Signature*]
[*Name of signatory*]
[*Title of signatory*]

6.2.3 Acceptance of Estimate Form

[*Employer'sletterhead*]

To: [*Contractor's name and address*] Date:

Attention: *[Name and title]*

Contract Name: *[Contract name]*
Contract Number: *[Contract number]*

Dear Ladies and/or Gentlemen:

We hereby accept your Estimate for Change Proposal and agree that you should proceed with the preparation of the Change Proposal.

1. Title of Change: [*Title*]
2. Change Request No./Rev.: [*Request number/revision*]
3. Estimate for Change Proposal No./Rev.: [*Proposal number/revision*]
4. Acceptance of Estimate No./Rev.: [*Estimate number/revision*]
5. Brief Description of Change: [*Description*]
6. Other Terms and Conditions: In the event that we decide not to order the Change accepted, you shall be entitled to compensation for the cost of preparing the Change Proposal described in your Estimate for Change Proposal mentioned in para. 3 above in accordance with GCC Clause 39 of the General Conditions.

[*Employer'sname*]
[*Signature*]
[*Name of signatory*]
[*Title of signatory*]

6.2.4 Change Proposal Form

[*Contractor'sletterhead*]

To: [*Employer's name and address*] Date:

Attention: [*Name and title*]

Contract Name: [*Contract name*]
Contract Number: [*Contract number*]

Dear Ladies and/or Gentlemen:

In response to your Request for Change Proposal No. [Number], we hereby submit our proposal as follows:

1. Title of Change: [*Name*]
2. Change Proposal No./Rev.: [*Proposal number/revision*]
3. Originator of Change: Employer: [*Name*] / Contractor: [*Name*]
4. Brief Description of Change: [*Description*]
5. Reasons for Change: [*Reason*]
6. Facilities and/or Item No. of Equipment related to the requested Change: [*Facilities*]
7. Reference drawings and/or technical documents for the requested Change: [*Drawing/Document No./Description*]
8. Estimate of increase/decrease to the Contract Price resulting from the Change Proposal:

		Amount [*insertamounts in the currencies of the Contract*]
(a)	Direct material	_____
(b)	Major construction equipment	_____
(c)	Direct field labor (Total hrs)	_____
(d)	Subcontracts	_____
(e)	Indirect material and labor	_____
(f)	Site supervision	_____
(g)	Head office technical staff salaries	
	Process engineer _____hrs @ _____ rate/hr	_____
	Project engineer _____hrs @_____ rate/hr	_____
	Equipment engineer_____hrs @ _____ rate/hr	_____
	Procurement _____hrs @ _____rate/hr	_____
	Draftsperson _____hrs @ _____ rate/hr	_____
	Total _____hrs	
(h)	Extraordinary costs (computer, travel, etc.)	_____

(i) Fee for general administration, % of Items _____

(j) Taxes and customs duties _____

Total lump sum cost of Change Proposal [*Sum of items (a) to (j)*]

Cost to prepare Estimate for Change Proposal [*Amount payable if Change is not accepted*]

9. Additional time for Completion required due to Change Proposal

10. Effect on the Functional Guarantees

11. Effect on the other terms and conditions of the Contract

12. Validity of this Proposal: within [Number] days after receipt of this Proposal by the Employer

13. Other terms and conditions of this Change Proposal:

    (a) You are requested to notify us of your acceptance, comments or rejection of this detailed Change Proposal within [Number] days from your receipt of this Proposal.

    (b) The amount of any increase and/or decrease shall be taken into account in the adjustment of the Contract Price.

    (c) Contractor's cost for preparation of this Change Proposal:[*. . . .insert amount. This cost shall be reimbursed by the employer in case of employer's withdrawal or rejection of this Change Proposal without default of the contractor in accordance with GCC Clause 39 of the General Conditions . . . .*]

[*Contractor's name*]
[*Signature*]
[*Name of signatory*]
[*Title of signatory*]

6.2.5 Change Order Form

[*Employer'sletterhead*]

To: *[Contractor's name and address]* Date:

Attention: *[Name and title]*

Contract Name: *[Contract name]*
Contract Number: *[Contract number]*

Dear Ladies and/or Gentlemen:

We approve the Change Order for the work specified in the Change Proposal (No. [*number*]), and agree to adjust the Contract Price, Time for Completion, and/or other conditions of the Contract in accordance with GCC Clause 39 of the General Conditions.

1. Title of Change: [*Name*]

2. Change Request No./Rev.: [*Request number/revision*]

3. Change Order No./Rev.: [*Order number/revision*]

4. Originator of Change: Employer: [*Name*] / Contractor: [*Name*]

5. Authorized Price:

   Ref. No.: [*Number*] Date: [*Date*]

   Foreign currency portion [*Amount*] plus Local currency portion [*Amount*]

6. Adjustment of Time for Completion

   None Increase [*Number*] days Decrease [*Number*] days

7. Other effects, if any

Authorized by: _____ Date: _____
Employer

Accepted by: _____ Date: _____
Contractor

6.2.6 Pending Agreement Change Order Form

[*Employer'sletterhead*]

To: *[Contractor's name and address]* Date:

Attention: *[Name and title]*

Contract Name: *[Contract name]*
Contract Number: *[Contract number]*

Dear Ladies and/or Gentlemen:

We instruct you to carry out the work in the Change Order detailed below in accordance with GCC Clause 39 of the General Conditions.

1. Title of Change: [*Name*]
2. Employer's Request for Change Proposal No./Rev.: [*number/revision*] dated: [*date*]
3. Contractor's Change Proposal No./Rev.: [*number/revision*] dated: [*date*]
4. Brief Description of Change: [*Description*]
5. Facilities and/or Item No. of equipment related to the requested Change: [*Facilities*]
6. Reference Drawings and/or technical documents for the requested Change:
   [*Drawing/Document No. / Description*]
7. Adjustment of Time for Completion:
8. Other change in the Contract terms:
9. Other terms and conditions:

[*Employer'sname*]

[*Signature*]

[*Name of signatory*]

[*Title of signatory*]

6.2.7 Application for Change Proposal Form

[*Contractor'sletterhead*]

To: [*Employer's name and address*] Date:

Attention: [*Name and title*]

Contract Name: [*Contract name*]
Contract Number: [*Contract number*]

Dear Ladies and/or Gentlemen:

We hereby propose that the work mentioned below be treated as a Change in the Facilities.

1. Title of Change: [*Name*]
2. Application for Change Proposal No./Rev.: [*Number/revision*] dated: [*Date*]
3. Brief Description of Change: [*Description*]
4. Reasons for Change:
5. Order of Magnitude Estimation (amount in the currencies of the Contract):[*Amount*]
6. Scheduled Impact of Change:
7. Effect on Functional Guarantees, if any:
8. Appendix:

[*Contractor'sname*]

[*Signature*]

[*Name of signatory*]

[*Title of signatory*]

7. Personnel Requirements

Using Form PER-1 and PER-2 in Section 4 (Bidding Forms), the Bidder must demonstrate that it has personnel who meet the following requirements:

No.	Position	Number of Personnel	Total Work Experience [years]	Experience In Similar Work [years]
1	Project Manager	1	Min. 12	Min. 10
2	Project Engineer Electrical	1	Min. 7	Min. 5
3	Project Engineer Civil	1	Min. 7	Min. 5
4	Diploma Engineer Electrical	2	Min. 5	Min. 3
5	Technician	10	Min. 5	Min. 3

8. Equipment Requirements

Package Name: Design, Supply, Installation and Commissioning of SPV Pumping System in Rangpur PBS-2.

Package No. SPIP-W-2

Using Form EQU in Section 4 (Bidding Forms), the Bidder must demonstrate that it has the key equipment listed below:

No.	Equipment Type and Characteristics	Minimum Number Required
1	Digital Multi-meter with both DC and AC voltage measurement up to 1000V	2
2	Digital Clamp Ampere meter with measurement capacity form 0 to 50A (both DC and AC)	2
3	Solar irradiation measurement meter	1
4	Digital Water flow meter	1
5	Digital water drawdown measurement meter	1
6	Drill Machine	2
7	Screw Diver, Slide wrench, Spanner, Hammer, Pliers, Wire Cutter, Cable Lugs Punch Machine set	2

BIDDING DOCUMENT FOR

DESIGN, SUPPLY, INSTALLATION AND COMMISSIONING OF SPV PUMPING SYSTEM IN RANGPUR PBS-2.

BID PACKAGE NO.: SPIP-W-2

POWER SYSTEM EFFICIENCY IMPROVEMENT PROJECT

[ADB LOAN NO.: 2769-BAN, AND GRANT NO.: 0583-BAN (EF) & 0584-BAN (EF)]

PART III OF III (CONDITIONS OF CONTRACT AND CONTRACT FORMS)

ISO 9001, ISO 14001 &
OHSAS 18001 Certified

BANGLADESH RURAL ELECTRIFICATION BOARD (BREB)
HEAD OFFICE, ACADEMIC BUILDING, 6TH FLOOR
NIKUNJA-2, KHILKHET, DHAKA-1229
BANGLADESH

SEPTEMBER 2019

Section 7: General Conditions of Contract

Table of Clauses

A. Contract and Interpretation 7-3
1. Definitions 7-3
2. Contract Documents 7-5
3. Interpretation 7-5
4. Communications 7-6
5. Law and Language 7-7
6. Fraud and Corruption 7-7

B. Subject Matter of Contract 7-9
7. Scope of Facilities 7-9
8. Time for Commencement and Completion 7-10
9. Contractor's Responsibilities 7-10
10. Employer's Responsibilities 7-11

C. Payment 7-12
11. Contract Price 7-12
12. Terms of Payment 7-12
13. Securities 7-13
14. Taxes and Duties 7-13

D. Intellectual Property 7-14
15. License/Use of Technical Information 7-14
16. Confidential Information 7-14

E. Execution of the Facilities 7-15
17. Representatives 7-15
18. Work Program 7-17
19. Subcontracting 7-18
20. Design and Engineering 7-18
21. Procurement 7-20
22. Installation 7-21
23. Test and Inspection 7-27
24. Completion of the Facilities 7-28
25. Commissioning and Operational Acceptance 7-30

F. Guarantees and Liabilities 7-32
26. Completion Time Guarantee 7-32
27. Defect Liability 7-33
28. Functional Guarantees 7-34
29. Patent Indemnity 7-35
30. Limitation of Liability 7-36

G. Risk Distribution 7-36
31. Transfer of Ownership 7-36
32. Care of Facilities 7-37

33. Loss of or Damage to Property; Accident or Injury to Workers; Indemnification 7-38
34. Insurance 7-39
35. Unforeseen Conditions 7-41
36. Change in Laws and Regulations 7-41
37. Force Majeure 7-42
38. War Risks 7-43

H. Change in Contract Elements 7-44
39. Change in the Facilities 7-44
40. Extension of Time for Completion 7-47
41. Suspension 7-48
42. Termination 7-49
43. Assignment 7-54

I. Claims, Disputes and Arbitration 7-54
44. Contractor's Claims 7-54
45. Disputes and Arbitration 7-55

A. Contract and Interpretation

1. Definitions

1.1 The following words and expressions shall have the meanings hereby assigned them:

(a) "Contract" means the Contract Agreement entered into between the Employer and the Contractor, together with the Contract Documents referred to therein; they shall constitute the Contract, and the term "the Contract" shall in all such documents be construed accordingly.

(b) "Contract Documents" means the documents listed in Article 1.1 (Contract Documents) of the Contract Agreement (including any amendments thereto).

(c) "GCC" means the General Conditions of Contract.

(d) "SCC" means the Special Conditions of Contract.

(e) "day" means calendar day.

(f) "year" means 365 days.

(g) "month" means calendar month.

(h) "Party" means the Employer or the Contractor, as the context requires.

(i) "Employer" means the person named as such in the SCC and includes the legal successors or permitted assigns of the Employer.

(j) "Project Manager" means the person appointed by the Employer in the manner provided in GCC Subclause 17.1 (Project Manager) hereof and named as such in the SCC to perform the duties delegated by the Employer.

(k) "Contractor" means the person(s) named as Contractor in the Contract Agreement, and includes the legal successors or permitted assigns of the Contractor.

(l) "Contractor's Representative" means any person nominated by the Contractor and approved by the Employer in the manner provided in GCC Subclause 17.2 (Contractor's Representative and Construction Manager) hereof to perform the duties delegated by the Contractor.

(m) "Construction Manager" means the person appointed by the Contractor's Representative in the manner provided in GCC Subclause 17.2.4.

(n) "Subcontractor," including manufacturers, means any person to whom execution of any part of the Facilities, including preparation of any design or supply of any Plant, is sub-contracted directly or indirectly by the Contractor, and includes its legal successors or permitted assigns.

(o) "Dispute Board" means the person or persons named as such in the SCC appointed by agreement between the Employer and the Contractor to make a decision on or to settle any dispute or difference between the Employer and the Contractor referred to him or her by the parties pursuant to GCC Subclause 45.1 (Dispute Board) hereof.

(p) "The Bank" means the financing institution named in the SCC.

(q) "Contract Price" means the sum specified in Article 2.1 (Contract Price) of the Contract Agreement, subject to such additions and

adjustments thereto or deductions therefrom, as may be made pursuant to the Contract.

(r) "Facilities" means the Plant to be supplied and installed, as well as all the Installation Services to be carried out by the Contractor under the Contract.

(s) "Plant" means permanent plant, equipment, machinery, apparatus, articles and things of all kinds to be provided and incorporated in the Facilities by the Contractor under the Contract (including the spare parts to be supplied by the Contractor under GCC Subclause 7.3 hereof), but does not include Contractor's Equipment.

(t) "Installation Services" means all those services ancillary to the supply of the Plant for the Facilities, to be provided by the Contractor under the Contract, such as transportation and provision of marine or other similar insurance, inspection, expediting, site preparation works (including the provision and use of Contractor's Equipment and the supply of all construction materials required), installation, testing, pre-commissioning, commissioning, operations, maintenance, the provision of operations and maintenance manuals, training, etc. as the case may require.

(u) "Contractor's Equipment" means all facilities, equipment, machinery, tools, apparatus, appliances, or things of every kind required in or for installation, completion and maintenance of Facilities that are to be provided by the Contractor, but does not include Plant, or other things intended to form or forming part of the Facilities.

(v) "Country of Origin" means the countries and territories eligible under the rules of the Bank as further elaborated in the SCC.

(w) "Site" means the land and other places upon which the Facilities are to be installed, and such other land or places as may be specified in the Contract as forming part of the Site.

(x) "Effective Date" means the date of fulfillment of all conditions stated in Article 3 (Effective Date) of the Contract Agreement, upon which the period until the Time for Completion shall be counted from.

(y) "Time for Completion" means the time within which Completion of the Facilities as a whole (or of a part of the Facilities where a separate Time for Completion of such part has been prescribed) is to be attained, as referred to in GCC Clause 8 and in accordance with the relevant provisions of the Contract.

(z) "Completion" means that the Facilities (or a specific part thereof where specific parts are specified in the Contract) have been completed operationally and structurally and put in a tight and clean condition, that all work in respect of Pre-commissioning of the Facilities or such specific part thereof has been completed, and that the Facilities or specific part thereof are ready for Commissioning as provided in GCC Clause 24 (Completion) hereof.

(aa) "Pre-commissioning" means the testing, checking and other requirements specified in the Employer's Requirements that are to be carried out by the Contractor in preparation for Commissioning as provided in GCC Clause 24 (Completion) hereof.

(bb) "Commissioning" means operation of the Facilities or any part thereof by the Contractor following Completion, which operation is to be carried out by the Contractor as provided in GCC Subclause 25.1 (Commissioning) hereof, for the purpose of carrying out Guarantee Test(s).

(cc) "Guarantee Test(s)" means the test(s) specified in the Employer's Requirements to be carried out to ascertain whether the Facilities or a specified part thereof is able to attain the Functional Guarantees specified in the Appendix (Functional Guarantees) to the Contract Agreement in accordance with the provisions of GCC Subclause 25.2 (Guarantee Test) hereof.

(dd) "Operational Acceptance" means the acceptance by the Employer of the Facilities (or any part of the Facilities where the Contract provides for acceptance of the Facilities in parts), which certifies the Contractor's fulfillment of the Contract in respect of Functional Guarantees of the Facilities (or the relevant part thereof) in accordance with the provisions of GCC Clause 28 (Functional Guarantees) hereof and shall include deemed acceptance in accordance with GCC Clause 25 (Commissioning and Operational Acceptance) hereof.

(ee) "Defect Liability Period" means the period of validity of the warranties given by the Contractor commencing at Completion of the Facilities or a part thereof, during which the Contractor is responsible for defects with respect to the Facilities (or the relevant part thereof) as provided in GCC Clause 27 (Defect Liability) hereof.

2. Contract Documents

2.1 Subject to Article 1.2 (Order of Precedence) of the Contract Agreement, all documents forming part of the Contract (and all parts thereof) are intended to be correlative, complementary and mutually explanatory. The Contract shall be read as a whole.

3. Interpretation

3.1 In the Contract, except where the context requires otherwise,

(a) words indicating one gender include all genders;

(b) words indicating the singular also include the plural and words indicating the plural also include the singular;

(c) provisions including the word "agree," "agreed," or "agreement" require the agreement to be record in writing;

(d) the word "tender" is synonymous with "bid," "tenderer" with "Bidder," and "tender documents" with "Bidding Documents;" and

(e) "written" or "in writing" means handwritten, typewritten, printed or electronically made, and resulting in a permanent record.

The marginal words and other headings shall not be taken into consideration in the interpretation of these Conditions.

3.2 <u>Incoterms</u>

Unless inconsistent with any provision of the Contract, the meaning of any trade term and the rights and obligations of parties thereunder shall be as prescribed by Incoterms.

"Incoterms" means international rules for interpreting trade terms published by the International Chamber of Commerce (latest edition),

38 Cours Albert 1er, 75008 Paris, France.

3.3 Entire Agreement
Subject to GCC Subclause 16.4 hereof, the Contract constitutes the entire agreement between the Employer and Contractor with respect to the subject matter of Contract and supersedes all communications, negotiations, and agreements (whether written or oral) of parties with respect thereto made prior to the date of Contract.

3.4 Amendment
No amendment or other variation of the Contract shall be effective unless it is in writing, is dated, expressly refers to the Contract, and is signed by a duly authorized representative of each party hereto.

3.5 Independent Contractor
The Contractor shall be an independent contractor performing the Contract. The Contract does not create any agency, partnership, joint venture, or other joint relationship between the parties hereto. Subject to the provisions of the Contract, the Contractor shall be solely responsible for the manner in which the Contract is performed. All employees, representatives, or Subcontractors engaged by the Contractor in connection with the performance of the Contract shall be under the complete control of the Contractor and shall not be deemed to be employees of the Employer, and nothing contained in the Contract or in any subcontract awarded by the Contractor shall be construed to create any contractual relationship between any such employees, representatives, or Subcontractors and the Employer.

3.6 Non-Waiver

3.6.1 Subject to GCC Subclause 3.6.2 below, no relaxation, forbearance, delay, or indulgence by either party in enforcing any of the terms and conditions of the Contract or the granting of time by either party to the other shall prejudice, affect, or restrict the rights of that party under the Contract, nor shall any waiver by either party of any breach of Contract operate as waiver of any subsequent or continuing breach of Contract.

3.6.2 Any waiver of a party's rights, powers, or remedies under the Contract must be in writing, must be dated, and signed by an authorized representative of the party granting such waiver, and must specify the right and the extent to which it is being waived.

3.7 Severability
If any provision or condition of the Contract is prohibited or rendered invalid or unenforceable, such prohibition, invalidity, or unenforceability shall not affect the validity or enforceability of any other provisions and conditions of the Contract.

3.8 Country of Origin
"Origin" means the place where the plant and component parts thereof are mined, grown, produced, or manufactured, and from which the services are provided. Plant components are produced when, through manufacturing, processing, or substantial or major assembling of components, a commercially recognized product results that is substantially in its basic characteristics or in purpose or utility from its components.

4.Communications

4.1 Wherever these Conditions provide for the giving or issuing of approvals, certificates, consents, determinations, notices, requests,

and discharges, these communications shall be

(a) in writing and delivered against receipt; and

(b) delivered, sent, or transmitted to the address for the recipient's communications as stated in the Contract Agreement.

When a certificate is issued to a Party, the certifier shall send a copy to the other Party. When a notice is issued to a Party, by the other Party or the Project Manager, a copy shall be sent to the Project Manager or the other Party, as the case may be.

5. Law and Language

5.1 The Contract shall be governed by and interpreted in accordance with laws of the country specified in the SCC.

5.2 The ruling language of the Contract shall be that stated in the SCC.

5.3 The language for communications shall be the ruling language unless otherwise stated in the SCC.

6. Fraud and Corruption

6.1 ADB's Anticorruption Policy (1998, as amended to date) requires Borrowers (including beneficiaries of ADB-financed activity), as well as Contractors, Subcontractors, manufacturers, and Consultants under ADB-financed contracts, observe the highest standard of ethics during the procurement and execution of such contracts. In pursuance of this policy, ADB

(a) defines, for the purposes of this provision, the terms set forth below as follows:

(i) "corrupt practice" means the offering, giving, receiving, or soliciting, directly or indirectly, anything of value to influence improperly the actions of another party;

(ii) "fraudulent practice" means any act or omission, including a misrepresentation, that knowingly or recklessly misleads, or attempts to mislead, a party to obtain a financial or other benefit or to avoid an obligation;

(iii) "coercive practice" means impairing or harming, or threatening to impair or harm, directly or indirectly, any party or the property of the party to influence improperly the actions of a party;

(iv) "collusive practice" means an arrangement between two or more parties designed to achieve an improper purpose, including influencing improperly the actions of another party;

(v) "abuse" means theft, waste, or improper use of assets related to ADB-related activity, either committed intentionally or through reckless disregard;

(vi) "conflict of interest" means any situation in which a party has interests that could improperly influence that party's performance of official duties or responsibilities, contractual obligations, or compliance with applicable laws and regulations;

(vii) "obstructive practice" means (a) deliberately destroying, falsifying, altering, or concealing of evidence material to an ADB investigation, or deliberately making false statements to investigators, with the intent to impede an ADB investigation; (b) threatening, harassing, or intimidating any party to prevent it from disclosing its knowledge of matters

relevant to a Bank investigation or from pursuing the investigation; or (c) deliberate acts intended to impede the exercise of ADB's contractual rights of audit or inspection or access to information; and

(viii) "integrity violation" is any act, as defined under ADB's Integrity Principles and Guidelines(2015, as amended from time to time), which violates ADB's Anticorruption Policy, including (i) to (vii) above and the following: violations of ADB sanctions, retaliation against whistleblowers or witnesses, and other violations of ADB's Anticorruption Policy, including failure to adhere to the highest ethical standard.

(b) will reject a proposal for award if it determines that the Bidder recommended for award has, directly or through an agent, engaged in corrupt, fraudulent, collusive, coercive, or obstructive practices or other integrity violations in competing for the Contract;

(c) will cancel the portion of the financing allocated to a contract if it determines at any time that representatives of the borrower or of a beneficiary of ADB-financing engaged in corrupt, fraudulent, collusive, coercive, or obstructive practices or other integrity violations during the procurement or the execution of that contract, without the borrower having taken timely and appropriate action satisfactory to ADB to remedy the situation;

(d) will impose remedial actions on a firm or an individual, at any time, in accordance with ADB's Anticorruption Policy and Integrity Principles and Guidelines, including declaring ineligible, either indefinitely or for a stated period of time, to participate[1] in ADB-financed, -administered, or -supported activities or to benefit from an ADB-financed, -administered, or -supported contract, financially or otherwise, if it at any time determines that the firm or individual has, directly or through an agent, engaged in corrupt, fraudulent, collusive, coercive, or obstructive practices or other integrity violations; and

(e) will have the right to require suppliers and contractors to permit ADB or its representative to inspect their accounts and records and other documents relating to the bid submission and contract performance and to have them audited by auditors appointed by ADB.

6.2 All Bidders, consultants, contractors, suppliers and other third parties engaged or involved in ADB-related activities have a duty to cooperate fully in any screening or investigation when requested by ADB to do so. Such cooperation includes, but is not limited to, the following:

(a) being available to be interviewed and replying fully and truthfully to all questions asked;

(b) providing ADB with any items requested that are within the party's control including, but not limited to, documents and other physical objects;

(c) upon written request by ADB, authorizing other related entities to release directly to ADB such information that is specifically and materially related, directly or indirectly, to the said entities or

[1] Whether as a Contractor, Subcontractor, Consultant, Manufacturer or Supplier, or Service Provider; or in any other capacity (different names are used depending on the particular Bidding Document).

issues which are the subject of the investigation;

(d) cooperating with all reasonable requests to search or physically inspect their person and/or work areas, including files, electronic databases, and personal property used on ADB activities, or that utilizes ADB's Information and Communications Technology (ICT) resources or systems (including mobile phones, personal electronic devices, and electronic storage devices such as external disk drives);

(e) cooperating in any testing requested by ADB, including but not limited to, fingerprint identification, handwriting analysis, and physical examination and analysis; and

(f) preserving and protecting confidentiality of all information discussed with, and as required by, ADB.

6.3 All Bidders, consultants, contractors and suppliers shall ensure that, in its contract with its sub-consultants, subcontractors, and other third parties engaged or involved in ADB-related activities, such sub-consultants, subcontractors, and other third parties similarly undertake the foregoing duty to cooperate fully in any screening or investigation when requested by ADB to do so.

B. Subject Matter of Contract

7. Scope of Facilities

7.1 Unless otherwise expressly limited in the Employer's Requirements, the Contractor's obligations cover the provision of all Plant and the performance of all Installation Services required for the design, the manufacture (including procurement, quality assurance, construction, installation, associated civil works, pre-commissioning and delivery) of the Plant and the installation, completion, and commissioning of the Facilities in accordance with the plans, procedures, specifications, drawings, codes, and any other documents as specified in the section Employer's Requirements. Such specifications include, but are not limited to, the provision of supervision and engineering services; the supply of labor, materials, equipment, spare parts (as specified in GCC Subclause 7.3 below) and accessories; Contractor's Equipment; construction utilities and supplies; temporary materials, structures, and facilities; transportation (including, without limitation, unloading and hauling to, from and at the Site); and storage, except for those supplies, works, and services that will be provided or performed by the Employer, as set forth in the Appendix (Scope of Works and Supply by the Employer) to the Contract Agreement.

7.2 The Contractor shall, unless specifically excluded in the Contract, perform all such work and/or supply all such items and materials not specifically mentioned in the Contract but that can be reasonably inferred from the Contract as being required for attaining Completion of the Facilities as if such work and/or items and materials were expressly mentioned in the Contract.

7.3 In addition to the supply of Mandatory Spare Parts included in the Contract, the Contractor agrees to supply spare parts required for the operation and maintenance of the Facilities for the period specified in the SCC and the provisions, if any, specified in the SCC. However, the identity, specifications, and quantities of such spare parts and the terms and conditions relating to the supply thereof are to be agreed between the Employer and the Contractor, and the price of such spare parts shall be that given in Price Schedule No. 6, which shall be added to the Contract Price. The price of such spare parts shall include the purchase price therefore and other costs and expenses (including the

Contractor's fees) relating to the supply of spare parts.

8. Time for Commencement and Completion

8.1 The Contractor shall commence work on the Facilities within the period specified in the SCC and without prejudice to GCC Subclause 26.2 hereof, the Contractor shall thereafter proceed with the Facilities in accordance with the time schedule specified in the Appendix 4 (Time Schedule) to the Contract Agreement.

8.2 The Contractor shall attain Completion of the Facilities or of a part where a separate time for Completion of such part is specified in the Contract, within the time stated in the SCC or within such extended time to which the Contractor shall be entitled under GCC Clause 40 hereof.

9. Contractor's Responsibilities

9.1 The Contractor shall design, manufacture, including associated purchases and/or subcontracting, install, and complete the Facilities in accordance with the Contract. When completed, the Facilities should be fit for the purposes for which they are intended as defined in the Contract.

9.2 The Contractor confirms that it has entered into this Contract on the basis of a proper examination of the data relating to the Facilities, including any data as to boring tests provided by the Employer, and on the basis of information that the Contractor could have obtained from a visual inspection of the Site if access thereto was available and of other data readily available to it relating to the Facilities as of the date 28 days prior to bid submission. The Contractor acknowledges that any failure to acquaint itself with all such data and information shall not relieve its responsibility for properly estimating the difficulty or cost of successfully performing the Facilities.

9.3 The Contractor shall acquire and pay for all permits, approvals, and/or licenses from all local, state, or national government authorities or public service undertakings in the country where the Site is located, which such authorities or undertakings require the Contractor to obtain in its name and which are necessary for the performance of the Contract, including, without limitation, visas for the Contractor's and Subcontractor's personnel and entry permits for all imported Contractor's Equipment. The Contractor shall acquire all other permits, approvals, and/or licenses that are not the responsibility of the Employer under GCC Subclause 10.3 hereof and that are necessary for the performance of the Contract.

9.4 The Contractor shall comply with all laws in force in the country where the Facilities are to be implemented. The laws will include all local, state, national, or other laws that affect the performance of the Contract and bind upon the Contractor. The Contractor shall indemnify and hold harmless the Employer from and against any and all liabilities, damages, claims, fines, penalties, and expenses of whatever nature arising or resulting from the violation of such laws by the Contractor or its personnel, including the Subcontractors and their personnel, but without prejudice to GCC Subclause 10.1 hereof.

9.5 Any plant and services that will be incorporated in or be required for the Facilities and other supplies shall have their origin as specified under GCC Clause 1 (Country of Origin). Any Subcontractors retained by the Contractor shall be from a country as specified in GCC Clause 1 (Country of Origin).

9.6 The Contractor shall permit ADB to inspect the Contractor's accounts and records relating to the performance of the Contractor and to have

them audited by auditors appointed by ADB, if so required by ADB.

9.7 If the Contractor is a joint venture or consortium of two or more persons, all such persons shall be jointly and severally bound to the Employer for the fulfillment of the provisions of the Contract and shall designate one of such persons to act as a leader with authority to bind the joint venture or consortium. The composition or the constitution of the joint venture or consortium shall not be altered without the prior consent of the Employer.

9.8 Protection of the Environment

(a) The Contractor shall take all reasonable steps to protect the environment (both on and off the Site) and to limit damage and nuisance to people and property resulting from pollution, noise, and other results of his operations.

(b) The Contractor shall ensure that emissions, surface discharges, and effluent from the Contractor's activities shall not exceed the values stated in the Specification or prescribed by applicable Laws.

10. Employer's Responsibilities

10.1 All information and/or data to be supplied by the Employer as described in the Appendix (Scope of Works and Supply by the Employer) to the Contract Agreement shall be deemed to be accurate, except when the Employer expressly states otherwise.

10.2 The Employer shall be responsible for acquiring and providing legal and physical possession of the Site and access thereto, and for providing possession of and access to all other areas reasonably required for the proper execution of the Contract, including all requisite rights of way, as specified in the Appendix (Scope of Works and Supply by the Employer) to the Contract Agreement. The Employer shall give full possession of and accord all rights of access thereto on or before the date(s) specified in that Appendix.

10.3 The Employer shall acquire and pay for all permits, approvals, and/or licenses from all local, state, or national government authorities, or public service undertakings in the country where the Site is located which (a) such authorities or undertakings require the Employer to obtain in the Employer's name, (b) are necessary for the execution of the Contract, including those required for the performance by both the Contractor and the Employer of their respective obligations under the Contract, and (c) are specified in the Appendix (Scope of Works and Supply by the Employer) to the Contract Agreement.

10.4 If requested by the Contractor, the Employer shall use its best endeavors to assist the Contractor in obtaining in a timely and expeditious manner all permits, approvals, and/or licenses necessary for the execution of the Contract from all local, state, or national government authorities, or public service undertakings that such authorities or undertakings require the Contractor or Subcontractors or the personnel of the Contractor or Subcontractors, as the case may be, to obtain.

10.5 Unless otherwise specified in the Contract or agreed upon by the Employer and the Contractor, the Employer shall provide sufficient, properly qualified operating and maintenance personnel; shall supply and make available all raw materials, utilities, lubricants, chemicals, catalysts, other materials and facilities; and shall perform all work and

services of whatsoever nature, including those required by the Contractor to properly carry out Pre-commissioning, Commissioning, and Guarantee Tests, all in accordance with the provisions of the Appendix (Scope of Works and Supply by the Employer) to the Contract Agreement at or before the time specified in the program furnished by the Contractor under GCC Subclause 18.2 hereof and in the manner thereupon specified or as otherwise agreed upon by the Employer and the Contractor.

10.6 The Employer shall be responsible for the continued operation of the Facilities after Completion, in accordance with GCC Subclause 24.8, and shall be responsible for facilitating the Guarantee Test(s) for the Facilities, in accordance with GCC Subclause 25.2.

10.7 All costs and expenses involved in the performance of the obligations under this GCC Clause 10 shall be the responsibility of the Employer, except those incurred by the Contractor with respect to the performance of Guarantee Tests, in accordance with GCC Subclause 25.2.

10.8 In the event that the Employer shall be in breach of any of his obligations imposed by the Contract, then the additional cost reasonably incurred by the Contractor in consequence thereof shall be added to the Contract Price.

C. Payment

11. Contract Price

11.1 The Contract Price shall be as specified in Article 2 (Contract Price and Terms of Payment) of the Contract Agreement.

11.2 Unless an adjustment clause is provided for in the SCC, the Contract Price shall be a firm lump sum not subject to any alteration, except in the event of a Change in the Facilities or as otherwise provided in the Contract.

11.3 Subject to GCC Subclauses 9.2, 10.1, and 35 hereof, the Contractor shall be deemed to have satisfied itself as to the correctness and sufficiency of the Contract Price, which shall, except as otherwise provided for in the Contract, cover all its obligations under the Contract.

12. Terms of Payment

12.1 The Contract Price shall be paid as specified in Article 2 (Contract Price and Terms of Payment) of the Contract Agreement and in the Appendix (Terms and Procedures of Payment) to the Contract Agreement, which also outlines the procedures to be followed in making application for and processing payments.

12.2 No payment made by the Employer herein shall be deemed to constitute acceptance by the Employer of the Facilities or any part(s) thereof.

12.3 In the event that the Employer fails to make any payment by its respective due date or within the period set forth in the Contract, the Employer shall pay to the Contractor interest on the amount of such delayed payment at the rate(s) shown in the Appendix (Terms and Procedures of Payment) to the Contract Agreement for the period of delay until payment has been made in full, whether before or after judgment or arbitrage award.

12.4 The currency or currencies in which payments are made to the Contractor under this Contract shall be specified in the Appendix

(Terms and Procedures of Payment) to the Contract Agreement, subject to the general principle that payments will be made in the currency or currencies in which the Contract Price has been stated in the Contractor's bid.

13. Securities

13.1 Issuance of Securities
The Contractor shall provide the securities specified below in favor of the Employer at the times, and in the amount, manner, and form specified below.

13.2 Advance Payment Security

13.2.1 The Contractor shall, within 28 days of the notification of contract award, provide a security in an amount equal to the advance payment calculated in accordance with the Appendix (Terms and Procedures of Payment) to the Contract Agreement, and in the same currency or currencies.

13.2.2 The security shall be in the form provided in the Bidding Documents or in another form acceptable to the Employer. The amount of the security shall be reduced in proportion to the value of the Facilities executed by and paid to the Contractor from time to time, and shall automatically become null and void when the full amount of the advance payment has been recovered by the Employer. The security shall be returned to the Contractor immediately after its expiration.

13.3 Performance Security

13.3.1 The Contractor shall, within 28 days of the notification of contract award, provide a security for the due performance of the Contract in the amount specified in the SCC.

13.3.2 The security shall be denominated in the currency or currencies of the Contract, or in a freely convertible currency acceptable to the Employer, and shall be in one of the forms of bank guarantees provided in the Bidding Documents, as stipulated by the Employer in the SCC, or in another form acceptable to the Employer.

13.3.3 Unless otherwise specified in the SCC, the security shall be reduced by half on the date of the Operational Acceptance. The Security shall become null and void, or shall be reduced pro rata to the Contract Price of a part of the Facilities for which a separate Time for Completion is provided, 540 days after Completion of the Facilities or 365 days after Operational Acceptance of the Facilities, whichever occurs first; provided, however, that if the Defects Liability Period has been extended on any part of the Facilities pursuant to GCC Subclause 27.8 hereof, the Contractor shall issue an additional security in an amount proportionate to the Contract Price of that part. The security shall be returned to the Contractor immediately after its expiration, provided, however, that if the Contractor, pursuant to GCC Subclause 27.10, is liable for an extended defect liability obligation, the performance security shall be extended for the period and up to the amount specified in the SCC.

14. Taxes and Duties

14.1 Except as otherwise specifically provided in the Contract, the Contractor shall bear and pay all taxes, duties, levies, and charges assessed on the Contractor, its Subcontractors, or their employees by all municipal, state, or national government authorities in connection with the Facilities in and outside of the country where the Site is

located.

14.2 Notwithstanding GCC Subclause 14.1 above, the Employer shall bear and promptly pay all customs and import duties as well as other local taxes like, e.g., a value-added tax (VAT), imposed by the law of the country where the Site is located on the Plant specified in Price Schedule No. 1 and that are to be incorporated into the Facilities.

14.3 If any tax exemptions, reductions, allowances, or privileges may be available to the Contractor in the country where the Site is located, the Employer shall use its best endeavors to enable the Contractor to benefit from any such tax savings to the maximum allowable extent.

14.4 For the purpose of the Contract, it is agreed that the Contract Price specified in Article 2 (Contract Price and Terms of Payment) of the Contract Agreement is based on the taxes, duties, levies, and charges prevailing at the date 28 days prior to the date of bid submission in the country where the Site is located (hereinafter called "Tax" in this GCC Subclause 14.4). If any rates of Tax are increased or decreased, a new Tax is introduced, an existing Tax is abolished, or any change in interpretation or application of any Tax occurs in the course of the performance of Contract, which was or will be assessed on the Contractor, Subcontractors, or their employees in connection with performance of the Contract, an equitable adjustment of the Contract Price shall be made to fully take into account any such change by addition to the Contract Price or deduction therefrom, as the case may be, in accordance with GCC Clause 36 hereof.

D. Intellectual Property

15. License/Use of Technical Information

15.1 For the operation and maintenance of the Plant, the Contractor hereby grants a non-exclusive and nontransferable license (without the right to sublicense) to the Employer under the patents, utility models, or other industrial property rights owned by the Contractor or by a third party from whom the Contractor has received the right to grant licenses thereunder, and shall also grant to the Employer a nonexclusive and nontransferable right (without the right to sublicense) to use the know-how and other technical information disclosed to the Employer under the Contract. Nothing contained herein shall be construed as transferring ownership of any patent, utility model, trademark, design, copyright, know-how, or other intellectual property right from the Contractor or any third party to the Employer.

15.2 The copyright in all drawings, documents, and other materials containing data and information furnished to the Employer by the Contractor herein shall remain vested in the Contractor or, if they are furnished to the Employer directly or through the Contractor by any third party, including suppliers of materials, the copyright in such materials shall remain vested in such third party.

16. Confidential Information

16.1 The Employer and the Contractor shall keep confidential and shall not, without the written consent of the other party hereto, divulge to any third party any documents, data or other information furnished directly or indirectly by the other party hereto in connection with the Contract, whether such information has been furnished prior to, during, or following termination of the Contract. Notwithstanding the above, the Contractor may furnish to its Subcontractor(s) such documents, data, and other information it receives from the Employer to the extent required for the Subcontractor(s) to perform its work under the

Contract, in which event the Contractor shall obtain from such Subcontractor(s) an undertaking of confidentiality similar to that imposed on the Contractor under this GCC Clause 16.

16.2 The Employer shall not use such documents, data, and other information received from the Contractor for any purpose other than the operation and maintenance of the Facilities. Similarly, the Contractor shall not use such documents, data, and other information received from the Employer for any purpose other than the design, procurement of Plant, construction, or such other work and services as are required for the performance of the Contract.

16.3 The obligation of a party under GCC Subclauses 16.1 and 16.2 above, however, shall not apply to that information, which

(a) now or hereafter enters the public domain through no fault of that party;

(b) can be proven to have been possessed by that party at the time of disclosure and which was not previously obtained, directly or indirectly, from the other party hereto; and

(c) otherwise lawfully becomes available to that party from a third party that has no obligation of confidentiality.

16.4 The above provisions of this GCC Clause 16 shall not in any way modify any undertaking of confidentiality given by either of the parties hereto prior to the date of the Contract in respect of the Facilities or any part thereof.

16.5 The provisions of this GCC Clause 16 shall survive termination, for whatever reason, of the Contract.

E. Execution of the Facilities

17. Representatives

17.1 Project Manager

If the Project Manager is not named in the Contract, then within 14 days of the Effective Date, the Employer shall appoint and notify the Contractor in writing of the name of the Project Manager. The Employer may from time to time appoint some other person as the Project Manager in place of the person previously so appointed, and shall give notice of the name of such other person to the Contractor without delay. No such appointment shall be made at such a time or in such a manner as to impede the progress of work on the Facilities. Such appointment shall only take effect upon receipt of such notice by the Contractor. The Project Manager shall represent and act for the Employer at all times during the performance of the Contract. All notices, instructions, orders, certificates, approvals, and all other communications under the Contract shall be given by the Project Manager, except as herein otherwise provided.

All notices, instructions, information, and other communications given by the Contractor to the Employer under the Contract shall be given to the Project Manager, except as herein otherwise provided.

17.2 Contractor's Representative and Construction Manager

17.2.1 If the Contractor's Representative is not named in the Contract, then within 14 days of the Effective Date, the Contractor shall appoint the Contractor's Representative and shall request the Employer in writing to approve the person so appointed. If the Employer makes no objection to the appointment within 14

days, the Contractor's Representative shall be deemed to have been approved. If the Employer objects to the appointment within 14 days giving the reason therefor, then the Contractor shall appoint a replacement within 14 days of such objection, and the foregoing provisions of this GCC Subclause 17.2.1 shall apply thereto.

17.2.2 The Contractor's Representative shall represent and act for the Contractor at all times during the performance of the Contract and shall give to the Project Manager all the Contractor's notices, instructions, information, and all other communications under the Contract.

All notices, instructions, information, and all other communications given by the Employer or the Project Manager to the Contractor under the Contract shall be given to the Contractor's Representative or, in its absence, its deputy, except as herein otherwise provided.
The Contractor shall not revoke the appointment of the Contractor's Representative without the Employer's prior written consent, which shall not be unreasonably withheld. If the Employer consents thereto, the Contractor shall appoint some other person as the Contractor's Representative, pursuant to the procedure set out in GCC Subclause 17.2.1.

17.2.3 The Contractor's Representative may, subject to the approval of the Employer which shall not be unreasonably withheld, at any time delegate to any person any of the powers, functions and authorities vested in him or her. Any such delegation may be revoked at any time. Any such delegation or revocation shall be subject to a prior notice signed by the Contractor's Representative, and shall specify the powers, functions, and authorities thereby delegated or revoked. No such delegation or revocation shall take effect unless and until a copy thereof has been delivered to the Employer and the Project Manager.

Any act or exercise by any person of powers, functions and authorities so delegated to him or her in accordance with this GCC Subclause 17.2.3 shall be deemed to be an act or exercise by the Contractor's Representative.

17.2.4 From the commencement of installation of the Facilities at the Site until Completion, the Contractor's Representative shall appoint a suitable person as the Construction Manager. The Construction Manager shall supervise all work done at the Site by the Contractor and shall be present at the Site throughout normal working hours except when on leave, sick, or absent for reasons connected with the proper performance of the Contract. Whenever the Construction Manager is absent from the Site, the Contractor's Representative or the Construction Manager shall appoint a suitable person to act as the Construction Manager'sdeputy.

17.2.5 The Employer may by notice to the Contractor object to any representative or person employed by the Contractor in the execution of the Contract who, in the reasonable opinion of the Employer, may behave inappropriately, may be incompetent or negligent, or may commit a serious breach of the Site regulations provided under GCC Subclause 22.4. The Employer shall provide evidence of the same, whereupon the

Contractor shall remove such person from the Facilities.

17.2.6 If any representative or person employed by the Contractor is removed in accordance with GCC Subclause 17.2.5, the Contractor shall, where required, promptly appoint a replacement.

18. Work Program

18.1 Contractor's Organization

The Contractor shall supply to the Employer and the Project Manager a chart showing the proposed organization to be established by the Contractor for carrying out work on the Facilities within 21 days of the Effective Date. The chart shall include the identities of the key personnel, and the curricula vitae of such key personnel to be employed shall be supplied together with the chart. The Contractor shall promptly inform the Employer and the Project Manager in writing of any revision or alteration of such an organization chart.

18.2 Program of Performance

Within 28 days after the Effective Date, the Contractor shall submit to the Project Manager a detailed program of performance of the Contract, made in a form acceptable to the Project Manager and showing the sequence in which it proposes to design, manufacture, transport, assemble, install, and pre-commission the Facilities, as well as the date by which the Contractor reasonably requires that the Employer shall have fulfilled its obligations under the Contract so as to enable the Contractor to execute the Contract in accordance with the program and to achieve Completion, Commissioning, and Acceptance of the Facilities in accordance with the Contract. The program so submitted by the Contractor shall accord with the Time Schedule included in the Appendix (Time Schedule) to the Contract Agreement and any other dates and periods specified in the Contract. The Contractor shall update and revise the program as and when appropriate or when required by the Project Manager, but without modification in the Times for Completion given in the SCC and any extension granted in accordance with GCC Clause 40, and shall submit all such revisions to the Project Manager.

18.3 Progress Report

The Contractor shall monitor progress of all the activities specified in the program referred to in GCC Subclause 18.2 above, and supply a progress report to the Project Manager every month.

The progress report shall be in a form acceptable to the Project Manager and shall indicate: (a) percentage completion achieved compared with the planned percentage completion for each activity; and (b) where any activity is behind the program, giving comments and likely consequences and stating the corrective action being taken.

18.4 Progress of Performance

If at any time the Contractor's actual progress falls behind the program referred to in GCC Subclause 18.2, or it becomes apparent that it will so fall behind, the Contractor shall, at the request of the Employer or the Project Manager, prepare and submit to the Project Manager a revised program, taking into account the prevailing circumstances, and shall notify the Project Manager of the steps being taken to expedite progress so as to attain Completion of the Facilities within the Time for Completion under GCC Subclause 8.2, any extension thereof entitled under GCC Subclause 40.1, or any extended period as may otherwise be agreed upon between the Employer and the Contractor.

18.5 Procedures

The Contract shall be executed in accordance with the Contract Documents including the procedures given in the Forms and Procedures of the Employer's Requirements.

The Contractor may execute the Contract in accordance with its own standard project execution plans and procedures to the extent that they do not conflict with the provisions contained in the Contract.

19.Subcontracting

19.1 The Appendix 5 (List of Major Items of Plant and Services and List of Approved Subcontractors) to the Contract Agreement specifies major items of plant and services and a list of approved Subcontractors against each item, including manufacturers. Insofar as no Subcontractors are listed against any such item, the Contractor shall prepare a list of Subcontractors for such item for inclusion in such list. The Contractor may from time to time propose any addition to or deletion from any such list. The Contractor shall submit any such list or any modification thereto to the Employer for its approval in sufficient time so as not to impede the progress of work on the Facilities. Such approval by the Employer for any of the Subcontractors shall not relieve the Contractor from any of its obligations, duties, or responsibilities under the Contract.

19.2 The Contractor shall select and employ its Subcontractors for such major items from those listed in the lists referred to in GCC Subclause 19.1.

19.3 For items or parts of the Facilities not specified in the Appendix (List of Major Items of Plant and Services and List of Approved Subcontractors for Major Items) to the Contract Agreement, the Contractor may employ such Subcontractors as it may select, at its discretion.

19.4 Each subcontract shall include provisions which would entitle the Employer to require the sub-contract to be assigned to the Employer under GCC 19.5 (if and when applicable), or in event of termination by the Employer under GCC 42.2.

19.5 If a Sub-contractor's obligations extend beyond the expiry date of the relevant Defects Liability Period and the Project Manager, prior to that date, instructs the Contractor to assign the benefits of such obligations to the Employer, then the Contractor shall do so.

20. Design and Engineering

20.1 Specifications and Drawings

20.1.1 The Contractor shall execute the basic and detailed design and the engineering work in compliance with the provisions of the Contract, or where not so specified, in accordance with good engineering practice.

The Contractor shall be responsible for any discrepancies, errors, or omissions in the specifications, drawings, and other technical documents that it has prepared, whether such specifications, drawings, and other documents have been approved by the Project Manager or not, provided that such discrepancies, errors, or omissions are not because of inaccurate information furnished in writing to the Contractor by or on behalf of the Employer.

20.1.2 The Contractor shall be entitled to disclaim responsibility for any design, data, drawing, specification, or other document, or any modification thereof provided or designated by or on behalf of the Employer, by giving a notice of such disclaimer to the

Project Manager.

20.2 Codes and Standards

Wherever references are made in the Contract to codes and standards in accordance with which the Contract shall be executed, the edition or the revised version of such codes and standards current at the date 28 days prior to date of bid submission shall apply unless otherwise specified. During Contract execution, any changes in such codes and standards shall be applied subject to approval by the Employer and shall be treated in accordance with GCC Clause 39.

20.3 Approval/Review of Technical Documents by Project Manager

20.3.1 The Contractor shall prepare or cause its Subcontractors to prepare, and furnish to the Project Manager the documents listed in the Appendix (List of Documents for Approval or Review) to the Contract Agreement for its approval or review as specified and in accordance with the requirements of GCC Subclause 18.2 (Program of Performance).

Any part of the Facilities covered by or related to the documents to be approved by the Project Manager shall be executed only after the Project Manager's approval thereof.

GCC Subclauses 20.3.2 through 20.3.7 shall apply to those documents requiring the Project Manager's approval, but not to those furnished to the Project Manager for its review only.

20.3.2 Within 14 days after receipt by the Project Manager of any document requiring the Project Manager's approval in accordance with GCC Subclause 20.3.1, the Project Manager shall either return one copy thereof to the Contractor with its approval endorsed thereon or shall notify the Contractor in writing of its disapproval thereof and the reasons therefor and the modifications that the Project Manager proposes.

If the Project Manager fails to take such action within the said 14 days, then the said document shall be deemed to have been approved by the Project Manager.

20.3.3 The Project Manager shall not disapprove any document, except on the grounds that the document does not comply with the Contract or that it is contrary to good engineering practice. If the Project Manager disapproves a document, he shall specify the reasons for his decision.

20.3.4 If the Project Manager disapproves the document, the Contractor shall modify the document and resubmit it for the Project Manager's approval in accordance with GCC Subclause 20.3.2. If the Project Manager approves the document subject to modification(s), the Contractor shall make the required modification(s), whereupon the document shall be deemed to have been approved.

20.3.5 If any dispute or difference occurs between the Employer and the Contractor in connection with or arising out of the disapproval by the Project Manager of any document and/or any modification(s) thereto that cannot be settled between the parties within a reasonable period, then such dispute or difference may be referred to a Dispute Board for determination in accordance with GCC Subclause 45.3 hereof. If such dispute or difference is referred to a Dispute Board, the Project Manager

shall give instructions as to whether and, if so, how, performance of the Contract is to proceed. The Contractor shall proceed with the Contract in accordance with the Project Manager's instructions, provided that if the Dispute Board upholds the Contractor's view on the dispute and if the Employer has not given notice under Subclause45.3 hereof, then the Contractor shall be reimbursed by the Employer for any additional costs incurred by reason of such instructions and shall be relieved of such responsibility or liability in connection with the dispute and the execution of the instructions as the Dispute Board shall decide, and the Time for Completion shall be extended accordingly.

20.3.6 The Project Manager's approval, with or without modification of the document furnished by the Contractor, shall not relieve the Contractor of any responsibility or liability imposed upon it by any provisions of the Contract except to the extent that any subsequent failure results from modifications required by the Project Manager.

20.3.7 The Contractor shall not depart from any approved document unless the Contractor has first submitted to the Project Manageran amended document and obtained the Project Manager's approval thereof, pursuant to the provisions of this GCC Subclause 20.3.

If the Project Manager requests any change in any already approved document and/or in any document based thereon, the provisions of GCC Clause 39 shall apply to such request.

21. Procurement

21.1 Materials

Subject to GCC Subclause 14.2, the Contractor shall procure and transport all materials in an expeditious and orderly manner to the Site.

21.2 Employer-Supplied Materials

If the Appendix (Scope of Works and Supply by the Employer) to the Contract Agreement provides that the Employer shall furnish any specific items to the Contractor, the following provisions shall apply:

21.2.1 The Employer shall, at its own risk and expense, transport each item to the place on or near the Site as agreed upon by the parties and make such item available to the Contractor at the time specified in the program furnished by the Contractor, pursuant to GCC Subclause 18.2, unless otherwise mutually agreed.

21.2.2 Upon receipt of such item, the Contractor shall inspect the same visually and notify the Project Manager of any detected shortage, defect, or default. The Employer shall immediately remedy any shortage, defect, or default, or the Contractor shall, if practicable and possible, at the request of the Employer, remedy such shortage, defect, or default at the Employer's cost and expense. After inspection, such item shall fall under the care, custody, and control of the Contractor. The provision of this GCC Subclause 21.2.2 shall apply to any item supplied to remedy any such shortage or default or to substitute for any defective item, or shall apply to defective items that have been repaired.

21.2.3 The foregoing responsibilities of the Contractor and its obligations of care, custody, and control shall not relieve the Employer of liability for any undetected shortage, defect, or default, nor place the Contractor under any liability for any such

shortage, defect or default whether under GCC Clause 27 or under any other provision of Contract.

21.3 Transportation

21.3.1 The Contractor shall at its own risk and expense transport all the materials and the Contractor's Equipment to the Site by the mode of transport that the Contractor judges most suitable under all the circumstances.

21.3.2 Unless otherwise provided in the Contract, the Contractor shall be entitled to select any safe mode of transport operated by any person to carry the materials and the Contractor's Equipment.

21.3.3 Upon dispatch of each shipment of materials and the Contractor's Equipment, the Contractor shall notify the Employer by telex, cable, facsimile, or electronic means, of the description of the materials and of the Contractor's Equipment, the point and means of dispatch, and the estimated time and point of arrival in the country where the Site is located, if applicable, and at the Site. The Contractor shall furnish the Employer with relevant shipping documents to be agreed upon between the parties.

21.3.4 The Contractor shall be responsible for obtaining, if necessary, approvals from the authorities for transportation of the materials and the Contractor's Equipment to the Site. The Employer shall use its best endeavors in a timely and expeditious manner to assist the Contractor in obtaining such approvals, if requested by the Contractor. The Contractor shall indemnify and hold harmless the Employer from and against any claim for damage to roads, bridges, or any other traffic facilities that may be caused by the transport of the materials and the Contractor's Equipment to the Site.

21.4 Customs Clearance

The Contractor shall, at its own expense, handle all imported materials and Contractor's Equipment at the point(s) of import and shall handle any formalities for customs clearance, subject to the Employer's obligations under GCC Subclause 14.2, provided that if applicable laws or regulations require any application or act to be made by or in the name of the Employer, the Employer shall take all necessary steps to comply with such laws or regulations. In the event of delays in customs clearance that are not the fault of the Contractor, the Contractor shall be entitled to an extension in the Time for Completion, pursuant to GCC Clause 40.

22. Installation

22.1 Setting Out/Supervision

22.1.1 Benchmark

(a) The Contractor shall be responsible for the true and proper setting-out of the Facilities in relation to bench marks, reference marks, and lines provided to it in writing byor on behalf ofthe Employer.

(b) If, at any time during the progress of installation of the Facilities, any error shall appear in the position, level, or alignment of the Facilities, the Contractor shall forthwith notify the Project Manager of such error and, at its own expense, immediately rectify such error to the reasonable

satisfaction of the Project Manager. If such error is based on incorrect data provided in writing by or on behalf of the Employer, the expense of rectifying the same shall be borne by the Employer.

22.1.2 Contractor's Supervision

The Contractor shall give or provide all necessary superintendence during the installation of the Facilities, and the Construction Manager or its deputy shall be constantly on the Site to provide full-time superintendence of the installation. The Contractor shall provide and employ only technical personnel who are skilled and experienced in their respective callings and supervisory staff who are competent to adequately supervise the work at hand.

22.2 Labor

22.2.1 Engagement of Staff and Labor

(a) Except as otherwise stated in the Specification, the Contractor shall make arrangements for the engagement of all staff and labor, local or otherwise, and for their payment, housing, feeding, and transport.

(b) The Contractor shall provide and employ on the Site in the installation of the Facilities such skilled, semi-skilled, and unskilled labor as is necessary for the proper and timely execution of the Contract. The Contractor is encouraged to use local labor that has the necessary skills.

(c) The Contractor shall be responsible for obtaining all necessary permit(s) and/or visa(s) from the appropriate authorities for the entry of all labor and personnel to be employed on the Site into the country where the Site is located. The Employer will, if requested by the Contractor, use his best endeavors in a timely and expeditious manner to assist the Contractor in obtaining any local, state, national, or government permission required for bringing in the Contractor's personnel.

(d) The Contractor shall at its own expense provide the means of repatriation to all of its and its Subcontractor's personnel employed on the Contract at the Site to the place where they were recruited or to their domicile. It shall also provide suitable temporary maintenance of all such persons from the cessation of their employment on the Contract to the date programmed for their departure. In the event that the Contractor defaults in providing such means of transportation and temporary maintenance, the Employer may provide the same to such personnel and recover the cost of doing so from the Contractor.

22.2.2 Persons in the Service of Employer

The Contractor shall not recruit, or attempt to recruit, staff and labor from amongst the Employer's Personnel.

22.2.3 Labor Laws

(a) The Contractor shall comply with all the relevant labor

Laws applicable to the Contractor's Personnel, including Laws relating to their employment, health, safety, welfare, immigration, and emigration, and shall allow them all their legal rights.

(b) The Contractor shall at all times during the progress of the Contract use its best endeavors to prevent any unlawful, riotous, or disorderly conduct or behavior by or amongst its employees and the labor of its Subcontractors.

(c) The Contractor shall, in all dealings with its labor and the labor of its Subcontractors currently employed on or connected with the Contract, pay due regard to all recognized festivals, official holidays, religious, or other customs and all local laws and regulations pertaining to the employment of labor.

22.2.4 Rates of Wages and Conditions of Labor

(a) The Contractor shall pay rates of wages, and observe conditions of labor, which are not lower than those established for the trade or industry where the work is carried out. If no established rates or conditions are applicable, the Contractor shall pay rates of wages and observe conditions which are not lower than the general level of wages and conditions observed locally by employers whose trade or industry is similar to that of the Contractor.

(b) The Contractor shall inform the Contractor's Personnel about their liability to pay personal income taxes in the Country in respect of such of their salaries, wages, and allowances as are chargeable under the Laws for the time being in force, and the Contractor shall perform such duties in regard to such deductions thereof as may be imposed on him by such Laws.

22.2.5 Working Hours

(a) No work shall be carried out on the Site on locally recognized days of rest, or outside the normal working hours stated in the SCC, unless

(i) otherwise stated in the Contract;

(ii) the Project Manager gives consent; or

(iii the work is unavoidable, or necessary for the protection of life or property or for the safety of the Works, in which case the Contractor shall immediately advise the Project Manager.

(b) If and when the Contractor considers it necessary to carry out work at night or on public holidays so as to meet the Time for Completion and requests the Project Manager's consent thereto, the Project Manager shall not unreasonably withhold such consent.

(c) This Subclause shall not apply to any work which is customarily carried out by rotary or double shifts.

22.2.6 Facilities for Staff and Labor

(a) Except as otherwise stated in the Specification, the Contractor shall provide and maintain all necessary

accommodation and welfare facilities for the Contractor's Personnel. The Contractor shall also provide facilities for the Employer's Personnel as stated in the Specification.

(b) The Contractor shall not permit any of the Contractor's Personnel to maintain any temporary or permanent living quarters within the structures forming part of the Permanent Works.

22.2.7 Health and Safety

(a) The Contractor shall at all times take all reasonable precautions to maintain the health and safety of the Contractor's Personnel. In collaboration with local health authorities, the Contractor shall ensure that medical staff, first aid facilities, sick bay, and ambulance service are available at all times at the Site and at any accommodation for Contractor's and Employer's Personnel, and that suitable arrangements are made for all necessary welfare and hygiene requirements and for the prevention of epidemics.

(b) The Contractor shall appoint an accident prevention officer at the Site, responsible for maintaining safety and protection against accidents. This person shall be qualified for this responsibility, and shall have the authority to issue instructions and take protective measures to prevent accidents. Throughout the performance of the Contract, the Contractor shall provide whatever is required by this person to exercise this responsibility and authority.

(c) The Contractor shall send to the Project Manager, details of any accident as soon as practicable after its occurrence. The Contractor shall maintain records and make reports concerning health, safety, and welfare of persons, and damage to property, as the Project Manager may reasonably require.

22.2.8 Funeral Arrangements

In the event of the death of any of the Contractor's personnel or accompanying members of their families, the Contractor shall be responsible for making the appropriate arrangements for their return or burial, unless otherwise specified in the SCC.

22.2.9 Records of Contractor's Personnel

The Contractor shall keep accurate records of the Contractor's personnel, including the number of each class of Contractor's Personnel on the Site and the names, ages, gender, hours worked, and wages paid to all workers. These records shall be summarized on a monthly basis in a form approved by the Project Manager and shall be available for inspection by the Project Manager until the Contractor has completed all work.

22.2.10 Supply of Foodstuff

The Contractor shall arrange for the provision of a sufficient supply of suitable food as may be stated in the Specification at reasonable prices for the Contractor's Personnel for the purposes of or in connection with the Contract.

22.2.11 Supply of Water

The Contractor shall, having regard to local conditions, provide on the Site an adequate supply of drinking and other water for

the use of the Contractor's Personnel.

22.2.12 Measures against Insect and Pest Nuisance
The Contractor shall at all times take the necessary precautions to protect the Contractor's Personnel employed on the Site from insect and pest nuisance, and to reduce their danger to health. The Contractor shall comply with all the regulations of the local health authorities, including use of appropriate insecticide.

22.2.13 Alcoholic Liquor or Drugs
The Contractor shall not, otherwise than in accordance with the Laws of the Country, import, sell, give barter, or otherwise dispose of any alcoholic liquor or drugs, or permit or allow importation, sale, gift barter, or disposal by Contractor's Personnel.

22.2.14 Arms and Ammunition
The Contractor shall not give, barter, or otherwise dispose of, to any person, any arms or ammunition of any kind, or allow Contractor's Personnel to do so.

22.2.15 Prohibition of All Forms of Forced or Compulsory Labor
The contractor shall not employ "forced or compulsory labor" in any form. "Forced or compulsory labor" consists of all work or service, not voluntarily performed, that is extracted from an individual under threat of force or penalty.

22.2.16 Prohibition of Harmful Child Labor
The Contractor shall not employ any child to perform any work that is economically exploitative, or is likely to be hazardous to, or to interfere with, the child's education, or to be harmful to the child's health or physical, mental, spiritual, moral, or social development.

22.3 Contractor's Equipment

22.3.1 All Contractor's Equipment brought by the Contractor onto the Site shall be deemed to be intended to be used exclusively for the execution of the Contract. The Contractor shall not remove the same from the Site without the Project Manager's consent that such Contractor's Equipment is no longer required for the execution of the Contract.

22.3.2 Unless otherwise specified in the Contract, upon completion of the Facilities, the Contractor shall remove from the Site all Equipment brought by the Contractor onto the Site and any surplus materials remaining thereon.

22.3.3 The Employer will, if requested, use its best endeavors to assist the Contractor in obtaining any local, state or national government permission required by the Contractor for the export of the Contractor's Equipment imported by the Contractor for use in the execution of the Contract that is no longer required for the execution of the Contract.

22.4 Site Regulations and Safety

The Employer and the Contractor shall establish Site regulations setting out the rules to be observed in the execution of the Contract at the Site and shall comply therewith. The Contractor shall prepare and submit to the Employer, with a copy to the Project Manager, proposed

Site regulations for the Employer's approval, which approval shall not be unreasonably withheld.

Such Site regulations shall include, but shall not be limited to, rules in respect of security, safety of the Facilities, gate control, sanitation, medical care, and fire prevention.

22.5 Opportunities for Other Contractors

22.5.1 The Contractor shall, upon written request from the Employer or the Project Manager, give all reasonable opportunities for carrying out the work to any other contractors employed by the Employer on or near the Site.

22.5.2 If the Contractor, upon written request from the Employer or the Project Manager, makes available to other contractors any roads or ways the maintenance for which the Contractor is responsible, permits the use by such other contractors of the Contractor's Equipment, or provides any other service of whatsoever nature for such other contractors, the Employer shall fully compensate the Contractor for any loss or damage caused or occasioned by such other contractors in respect of any such use or service, and shall pay to the Contractor reasonable remuneration for the use of such equipment or the provision of such services.

22.5.3 The Contractor shall also so arrange to perform its work as to minimize, to the extent possible, interference with the work of other contractors. The Project Manager shall determine the resolution of any difference or conflict that may arise between the Contractor and other contractors and the workers of the Employer in regard to their work.

22.5.4 The Contractor shall notify the Project Manager promptly of any defects in the other Contractors' work that come to its notice, and that could affect the Contractor's work. The Project Manager shall determine the corrective measures, if any, required to rectify the situation after inspection of the Facilities. Decisions made by the Project Manager shall be binding on the Contractor.

22.6 Emergency Work

If, by reason of an emergency arising in connection with and during the execution of the Contract, any protective or remedial work is necessary as a matter of urgency to prevent damage to the Facilities, the Contractor shall immediately carry out such work.

If the Contractor is unable or unwilling to do such work immediately, the Employer may do or cause such work to be done as the Employer may determine is necessary in order to prevent damage to the Facilities. In such event the Employer shall, as soon as practicable after the occurrence of any such emergency, notify the Contractor in writing of such emergency, the work done and the reasons therefor. If the work done or caused to be done by the Employer is work that the Contractor was liable to do at its own expense under the Contract, the reasonable costs incurred by the Employer in connection therewith shall be paid by the Contractor to the Employer. Otherwise, the cost of such remedial work shall be borne by the Employer.

22.7 Site Clearance

22.7.1 Site Clearance in Course of Performance

In the course of carrying out the Contract, the Contractor shall keep the Site reasonably free from all unnecessary obstruction, store, or remove any surplus materials, clear away any wreckage, rubbish, or temporary works from the Site, and remove any Contractor's Equipment no longer required for execution of the Contract.

22.7.2 Clearance of Site after Completion

After Completion of all parts of the Facilities, the Contractor shall clear away and remove all wreckage, rubbish, and debris of any kind from the Site, and shall leave the Site and Facilities in a clean and safe condition.

22.8 Watching and Lighting

The Contractor shall provide and maintain at its own expense all lighting, fencing, and watching when and where necessary for the proper execution and the protection of the Facilities, or for the safety of the owners and occupiers of adjacent property and for the safety of the public.

23. Test and Inspection

23.1 The Contractor shall at its own expense carry out at the place of manufacture and/or on the Site all such tests and/or inspections of the Plant and any part of the Facilities as are specified in the Contract.

23.2 The Employer and the Project Manager or their designated representatives shall be entitled to attend the aforesaid test and/or inspection, provided that the Employer shall bear all costs and expenses incurred in connection with such attendance including, but not limited to, all traveling and board and lodging expenses.

23.3 Whenever the Contractor is ready to carry out any such test and/or inspection, the Contractor shall give a reasonable advance notice of such test and/or inspection and of the place and time thereof to the Project Manager. The Contractor shall obtain from any relevant third party or manufacturer any necessary permission or consent to enable the Employer and the Project Manager or their designated representatives to attend the test and/or inspection.

23.4 The Contractor shall provide the Project Manager with a certified report of the results of any such test and/or inspection.

If the Employer or Project Manager or their designated representatives fails to attend the test and/or inspection, or if it is agreed between the parties that such persons shall not do so, then the Contractor may proceed with the test and/or inspection in the absence of such persons, and may provide the Project Manager with a certified report of the results thereof.

23.5 The Project Manager may require the Contractor to carry out any test and/or inspection not required by the Contract, provided that the Contractor's reasonable costs and expenses incurred in the carrying out of such test and/or inspection shall be added to the Contract Price. Further, if such test and/or inspection impedes the progress of work on the Facilities and/or the Contractor's performance of its other obligations under the Contract, due allowance will be made in respect

of the Time for Completion and the other obligations so affected.

23.6 If any Plant or any part of the Facilities fails to pass any test and/or inspection, the Contractor shall either rectify or replace such Plant or part of the Facilities and shall repeat the test and/or inspection upon giving a notice under GCC Subclause 23.3.

23.7 If any dispute or difference of opinion shall arise between the parties in connection with or arising out of the test and/or inspection of the Plant or part of the Facilities that cannot be settled between the parties within a reasonable period of time, it may be referred to an Dispute Board for determination in accordance with GCC Subclause 45.3.

23.8 The Contractor shall afford the Employer and the Project Manager, at the Employer's expense, access at any reasonable time to any place where the Plant are being manufactured or the Facilities are being installed, in order to inspect the progress and the manner of manufacture or installation, provided that the Project Manager shall give the Contractor a reasonable prior notice.

23.9 The Contractor agrees that neither the execution of a test and/or inspection of Plant or any part of the Facilities, nor the attendance by the Employer or the Project Manager, nor the issue of any test certificate pursuant to GCC Subclause 23.4, shall release the Contractor from any other responsibilities under the Contract.

23.10 No part of the Facilities or foundations shall be covered up on the Site without the Contractor carrying out any test and/or inspection required under the Contract. The Contractor shall give a reasonable notice to the Project Manager whenever any such parts of the Facilities or foundations are ready or about to be ready for test and/or inspection; such test and/or inspection and notice thereof shall be subject to the requirements of the Contract.

23.11 The Contractor shall uncover any part of the Facilities or foundations, or shall make openings in or through the same as the Project Manager may from time to time require at the Site, and shall reinstate and make good such part or parts.

If any parts of the Facilities or foundations have been covered up at the Site after compliance with the requirement of GCC Subclause 23.10 and are found to be executed in accordance with the Contract, the expenses of uncovering, making openings in or through, reinstating, and making good the same shall be borne by the Employer, and the Time for Completion shall be reasonably adjusted to the extent that the Contractor has thereby been delayed or impeded in the performance of any of its obligations under the Contract.

24. Completion of the Facilities

24.1 As soon as the Facilities or any part thereof has, in the opinion of the Contractor, been completed operationally and structurally and put in a tight and clean condition as specified in the Employer's Requirements, excluding minor items not materially affecting the operation or safety of the Facilities, the Contractor shall so notify the Employer in writing.

24.2 Within 7 days after receipt of the notice from the Contractor under GCC Subclause 24.1, the Employer shall supply the operating and maintenance personnel specified in the Appendix (Scope of Works and Supply by the Employer) to the Contract Agreement for Pre-commissioning of the Facilities or any part thereof.

Pursuant to the Appendix (Scope of Works and Supply by the

Employer) to the Contract Agreement, the Employer shall also provide, within the said 7-day period, the raw materials, utilities, lubricants, chemicals, catalysts, facilities, services, and other matters required for Pre-commissioning of the Facilities or any part thereof.

24.3 As soon as reasonably practicable after the operating and maintenance personnel have been supplied by the Employer and the raw materials, utilities, lubricants, chemicals, catalysts, facilities, services, and other matters have been provided by the Employer in accordance with GCC Subclause 24.2, the Contractor shall commence Pre-commissioning of the Facilities or the relevant part thereof in preparation for Commissioning, subject to GCC Subclause 25.5.

24.4 As soon as all works in respect of Pre-commissioning are completed and, in the opinion of the Contractor, the Facilities or any part thereof is ready for Commissioning, the Contractor shall so notify the Project Manager in writing.

24.5 The Project Manager shall, within 14 days after receipt of the Contractor's notice under GCC Subclause 24.4, either issue a Completion Certificate in the form specified in the Employer's Requirements (Forms and Procedures), stating that the Facilities or that part thereof have reached Completion as of the date of the Contractor's notice under GCC Subclause 24.4, or notify the Contractor in writing of any defects and/or deficiencies.

If the Project Manager notifies the Contractor of any defects and/or deficiencies, the Contractor shall then correct such defects and/or deficiencies, and shall repeat the procedure described in GCC Subclause 24.4.

If the Project Manager is satisfied that the Facilities or that part thereof have reached Completion, the Project Manager shall, within 7 days after receipt of the Contractor's repeated notice, issue a Completion Certificate stating that the Facilities or that part thereof have reached Completion as of the date of the Contractor's repeated notice.

If the Project Manager is not so satisfied, then it shall notify the Contractor in writing of any defects and/or deficiencies within 7 days after receipt of the Contractor's repeated notice, and the above procedure shall be repeated.

24.6 If the Project Manager fails to issue the Completion Certificate and fails to inform the Contractor of any defects and/or deficiencies within 14 days after receipt of the Contractor's notice under GCC Subclause 24.4 or within 7 days after receipt of the Contractor's repeated notice under GCC Subclause 24.5, or if the Employer makes use of the Facilities or part thereof, then the Facilities or that part thereof shall be deemed to have reached Completion as of the date of the Contractor's notice or repeated notice, or as of the Employer's use of the Facilities, as the case may be.

24.7 As soon as possible after Completion, the Contractor shall complete all outstanding minor items so that the Facilities are fully in accordance with the requirements of the Contract, failing which the Employer will undertake such completion and deduct the costs thereof from any monies owing to the Contractor.

24.8 Upon Completion, the Employer shall be responsible for the care and custody of the Facilities or the relevant part thereof, together with the risk of loss or damage thereto, and shall thereafter take over the

Facilities or the relevant part thereof.

25. Commissioning and Operational Acceptance

25.1 Commissioning

25.1.1 Commissioning of the Facilities or any part thereof shall be commenced by the Contractor immediately after issue of the Completion Certificate by the Project Manager, pursuant to GCC Subclause 24.5, or immediately after the date of the deemed Completion, under GCC Subclause 24.6.

25.1.2 The Employer shall supply the operating and maintenance personnel and all raw materials, utilities, lubricants, chemicals, catalysts, facilities, services, and other matters required for Commissioning.

25.1.3 In accordance with the requirements of the Contract, the Contractor's and Project Manager's advisory personnel shall attend the Commissioning, including the Guarantee Test, and shall advise and assist the Employer.

25.2 Guarantee Test

25.2.1 Subject to GCC Subclause 25.5, the Guarantee Test and repeats thereof shall be conducted by the Contractor during Commissioning of the Facilities or the relevant part thereof to ascertain whether the Facilities or the relevant part can attain the Functional Guarantees specified in the Appendix (Functional Guarantees) to the Contract Agreement. The Employer shall promptly provide the Contractor with such information as the Contractor may reasonably require in relation to the conduct and results of the Guarantee Test and any repeats thereof.

25.2.2 If for reasons not attributable to the Contractor, the Guarantee Test of the Facilities or the relevant part thereof cannot be successfully completed within the period from the date of Completion specified in the SCC or any other period agreed upon by the Employer and the Contractor, the Contractor shall be deemed to have fulfilled its obligations with respect to the Functional Guarantees, and GCC Subclauses 28.2 and 28.3 shall not apply.

25.3 Operational Acceptance

25.3.1 Subject to GCC Subclause 25.4 below, Operational Acceptance shall occur in respect of the Facilities or any part thereof when

(a) the Guarantee Test has been successfully completed and the Functional Guarantees are met; or

(b) the Guarantee Test has not been successfully completed or has not been carried out for reasons not attributable to the Contractor within the period from the date of Completion specified in the SCC, or any other agreed upon period as specified in GCC Subclause 25.2.2 above; or

(c) the Contractor has paid the liquidated damages specified in GCC Subclause 28.3 hereof; and

(d) any minor items mentioned in GCC Subclause 24.7 hereof relevant to the Facilities or that part thereof have been completed.

25.3.2 At any time after any of the events set out in GCC Subclause

25.3.1 have occurred, the Contractor may give a notice to the Project Manager requesting the issue of an Operational Acceptance Certificate in the form provided in the Employer's Requirements (Forms and Procedures)in respect of the Facilities or the part thereof specified in such notice as of the date of such notice.

25.3.3 The Project Manager shall, after consultation with the Employer, and within 7 days after receipt of the Contractor's notice, issue an Operational Acceptance Certificate.

25.3.4 If within 7 days after receipt of the Contractor's notice, the Project Manager fails to issue the Operational Acceptance Certificate or fails to inform the Contractor in writing of the justifiable reasons why the Project Manager has not issued the Operational Acceptance Certificate, the Facilities or the relevant part thereof shall be deemed to have been accepted as of the date of the Contractor's said notice.

25.4 Partial Acceptance

25.4.1 If the Contract specifies that Completion and Commissioning shall be carried out in respect of parts of the Facilities, the provisions relating to Completion and Commissioning including the Guarantee Test shall apply to each such part of the Facilities individually, and the Operational Acceptance Certificate shall be issued accordingly for each such part of the Facilities.

25.4.2 If a part of the Facilities comprises facilities such as buildings, for which no Commissioning or Guarantee Test is required, then the Project Manager shall issue the Operational Acceptance Certificate for such facility when it attains Completion, provided that the Contractor shall thereafter complete any outstanding minor items that are listed in the Operational Acceptance Certificate.

25.5 Delayed Pre-Commissioning and/or Guarantee Test

25.5.1 In the event that the Contractor is unable to proceed with the Pre-commissioning of the Facilities pursuant to Subclause 24.3, or with the Guarantee Test pursuant to Subclause 25.2, for reasons attributable to the Employer either on account of non availability of other facilities under the responsibilities of other contractor(s), or for reasons beyond the Employer's control, the provisions leading to "deemed" completion of activities such as Completion, pursuant to GCC Subclause 24.6, and Operational Acceptance, pursuant to GCC Subclause 25.3.4, and Contractor's obligations regarding Defect Liability Period, pursuant to GCC Subclause 27.2, Functional Guarantee, pursuant to GCC Clause 28, and Care of Facilities, pursuant to GCC Clause 32, and GCC Clause 41.1, Suspension, shall not apply. In this case, the following provisions shall apply.

25.5.2 When the Contractor is notified by the Project Manager that he will be unable to proceed with the activities and obligations pursuant to above Subclause 25.5.1, the Contractor shall be entitled to the following:

(a) the Time of Completion shall be extended for the period of suspension without imposition of liquidated damages

pursuant to GCC Subclause 26.2;

(b) payments due to the Contractor in accordance with the provision specified in the Appendix (Terms and Procedures of Payment) to the Contract Agreement, which would not have been payable in normal circumstances due to non completion of the subject activities, shall be released to the Contractor against submission of a security in the form of a bank guarantee of equivalent amount acceptable to the Employer, and which shall become null and void when the Contractor will have complied with its obligations regarding those payments, subject to the provision of Subclause 25.5.3 below;

(c) the expenses towards the above security and extension of other securities under the contract, of which validity needs to be extended, shall be reimbursed to the Contractor by the Employer;

(d) the additional charges towards the care of the Facilities pursuant to GCC Subclause 32.1 shall be reimbursed to the Contractor by the Employer for the period between the notification mentioned above and the notification mentioned in Subclause 25.5.4 below. The provision of GCC Subclause 33.2 shall apply to the Facilities during the same period.

25.5.3 In the event that the period of suspension under above Subclause 25.5.1 actually exceeds 180 days, the Employer and Contractor shall mutually agree to any additional compensation payable to the Contractor.

25.5.4 When the Contractor is notified by the Project Manager that the plant is ready for Pre-commissioning, the Contractor shall proceed without delay in performing all the specified activities and obligations under the contract.

F. Guarantees and Liabilities

26. Completion Time Guarantee

26.1 The Contractor guarantees that it shall attain Completion of the Facilities (or a part for which a separate time for completion is specified) within the Time for Completion specified in the SCC pursuant to GCC Subclause 8.2, or within such extended time to which the Contractor shall be entitled under GCC Clause 40 hereof.

26.2 If the Contractor fails to attain Completion of the Facilities or any part thereof within the Time for Completion or any extension thereof under GCC Clause 40, the Contractor shall pay to the Employer liquidated damages in the amount specified in the SCC as a percentage rate of the Contract Price or the relevant part thereof. The aggregate amount of such liquidated damages shall in no event exceed the amount specified as “Maximum” in the SCC as a percentage rate of the Contract Price. Once the “Maximum” is reached, the Employer may consider termination of the Contract, pursuant to GCC Subclause 42.2.2.

Such payment shall completely satisfy the Contractor’s obligation to attain Completion of the Facilities or the relevant part thereof within the Time for Completion or any extension thereof under GCC Clause 40.

The Contractor shall have no further liability whatsoever to the Employer in respect thereof.

However, the payment of liquidated damages shall not in any way relieve the Contractor from any of its obligations to complete the Facilities or from any other obligations and liabilities of the Contractor under the Contract.

Save for liquidated damages payable under this GCC Subclause 26.2, the failure by the Contractor to attain any milestone or other act, matter or thing by any date specified in the Appendix (Time Schedule) to the Contract Agreement and/or other program of work prepared pursuant to GCC Subclause 18.2 shall not render the Contractor liable for any loss or damage thereby suffered by the Employer.

26.3 If the Contractor attains Completion of the Facilities or any part thereof before the Time for Completion or any extension thereof under GCC Clause 40, the Employer shall pay to the Contractor a bonus in the amount specified in the SCC. The aggregate amount of such bonus shall in no event exceed the amount specified as “Maximum” in the SCC.

27. Defect Liability

27.1 The Contractor warrants that the Facilities or any part thereof shall be free from defects in the design, engineering, materials, and workmanship of the Plant supplied and of the work executed.

27.2 The Defect Liability Period shall be 540 days from the date of Completion of the Facilities (or any part thereof) or 1 year from the date of Operational Acceptance of the Facilities (or any part thereof), whichever first occurs, unless specified otherwise in the SCC pursuant to GCC Subclause 27.10.

If during the Defect Liability Period any defect should be found in the design, engineering, materials, and workmanship of the Plant supplied or of the work executed by the Contractor, the Contractor shall promptly, in consultation and agreement with the Employer regarding appropriate remedying of the defects, and at its cost, repair, replace, or otherwise make good as the Contractor shall determine at its discretion, such defect as well as any damage to the Facilities caused by such defect. The Contractor shall not be responsible for the repair, replacement, or making good of any defect or of any damage to the Facilities arising out of or resulting from any of the following causes:

(a) improper operation or maintenance of the Facilities by the Employer,

(b) operation of the Facilities outside specifications provided in the Contract, or

(c) normal wear and tear.

27.3 The Contractor’s obligations under this GCC Clause 27 shall not apply to:

(a) any materials that are supplied by the Employer under GCC Subclause 21.2, are normally consumed in operation, or have a normal life shorter than the Defect Liability Period stated herein;

(b) any designs, specifications or other data designed, supplied, or specified by or on behalf of the Employer or any matters for which the Contractor has disclaimed responsibility herein; or

(c) any other materials supplied or any other work executed by or on

behalf of the Employer, except for the work executed by the Employer under GCC Subclause 27.7.

27.4 The Employer shall give the Contractor a notice stating the nature of any such defect together with all available evidence thereof, promptly following the discovery thereof. The Employer shall afford all reasonable opportunity for the Contractor to inspect any such defect.

27.5 The Employer shall afford the Contractor all necessary access to the Facilities and the Site to enable the Contractor to perform its obligations under this GCC Clause 27.

The Contractor may, with the consent of the Employer, remove from the Site any Plant or any part of the Facilities that are defective if the nature of the defect, and/or any damage to the Facilities caused by the defect, is such that repairs cannot be expeditiously carried out at the Site.

27.6 If the repair, replacement or making good is of such a character that it may affect the efficiency of the Facilities or any part thereof, the Employer may give to the Contractor a notice requiring that tests of the defective part of the Facilities shall be made by the Contractor immediately upon completion of such remedial work, whereupon the Contractor shall carry out such tests.

If such part fails the tests, the Contractor shall carry out further repair, replacement or making good, as the case may be, until that part of the Facilities passes such tests. The tests shall be agreed upon by the Employer and the Contractor.

27.7 If the Contractor fails to commence the work necessary to remedy such defect or any damage to the Facilities caused by such defect within a reasonable time (which shall in no event be considered to be less than 15 days), the Employer may, following notice to the Contractor, proceed to do such work, and the reasonable costs incurred by the Employer in connection therewith shall be paid to the Employer by the Contractor or may be deducted by the Employer from any monies due the Contractor or claimed under the Performance Security.

27.8 If the Facilities or any part thereof cannot be used by reason of such defect and/or making good of such defect, the Defect Liability Period of the Facilities or such part, as the case may be, shall be extended by a period equal to the period during which the Facilities or such part cannot be used by the Employer because of any of the aforesaid reasons.

27.9 Except as provided in GCC Clauses 27 and 33, the Contractor shall be under no liability whatsoever and howsoever arising, and whether under the Contract or at law, in respect of defects in the Facilities or any part thereof, the Plant, design, or engineering, or work executed that appear after Completion of the Facilities or any part thereof, except where such defects are the result of the gross negligence, fraud, criminal, or willful action of the Contractor.

27.10 In addition, any such component of the Facilities and during the period of time as may be specified in the SCC shall be subject to an extended Defect Liability Period. Such obligation of the Contractor shall be in addition to the Defect Liability Period specified under GCC Subclause 27.2.

28. Functional

28.1 The Contractor guarantees that during the Guarantee Test, the

Guarantees

Facilities and all parts thereof shall attain the Functional Guarantees specified in the Appendix (Functional Guarantees) to the Contract Agreement, subject to, and upon the conditions therein specified.

28.2 If, for reasons attributable to the Contractor, the minimum level of the Functional Guarantees specified in the Appendix (Functional Guarantees) to the Contract Agreement are not met either in whole or in part, the Contractor shall at its cost and expense make such changes, modifications, and/or additions to the Plant or any part thereof as may be necessary to meet at least the minimum level of such Guarantees. The Contractor shall notify the Employer upon completion of the necessary changes, modifications, and/or additions, and shall request the Employer to repeat the Guarantee Test until the minimum level of the Guarantees has been met. If the Contractor eventually fails to meet the minimum level of Functional Guarantees, the Employer may consider termination of the Contract, pursuant to GCC Subclause 42.2.2.

28.3 If, for reasons attributable to the Contractor, the Functional Guarantees specified in the Appendix (Functional Guarantees) to the Contract Agreement are not attained either in whole or in part, but the minimum level of the Functional Guarantees specified in the said Appendix to the Contract Agreement is met, the Contractor shall, at the Contractor's option, either

(a) make such changes, modifications, and/or additions to the Facilities or any part thereof that are necessary to attain the Functional Guarantees at its cost and expense, and shall request the Employer to repeat the Guarantee Test or

(b) pay liquidated damages to the Employer in respect of the failure to meet the Functional Guarantees in accordance with the provisions in the Appendix (Functional Guarantees) to the Contract Agreement.

28.4 The payment of liquidated damages under GCC Subclause 28.3, up to the limitation of liability specified in the Appendix (Functional Guarantees) to the Contract Agreement, shall completely satisfy the Contractor's guarantees under GCC Subclause 28.3, and the Contractor shall have no further liability whatsoever to the Employer in respect thereof. Upon the payment of such liquidated damages by the Contractor, the Project Manager shall issue the Operational Acceptance Certificate for the Facilities or any part thereof in respect of which the liquidated damages have been so paid.

29. Patent Indemnity

29.1 The Contractor shall, subject to the Employer's compliance with GCC Subclause 29.2, indemnify and hold harmless the Employer and its employees and officers from and against any and all suits, actions, or administrative proceedings, claims, demands, losses, damages, costs, and expenses of whatsoever nature, including attorney's fees and expenses, which the Employer may suffer as a result of any infringement or alleged infringement of any patent, utility model, registered design, trademark, copyright, or other intellectual property right registered or otherwise existing at the date of the Contract by reason of (a) the installation of the Facilities by the Contractor or the use of the Facilities in the country where the Site is located, and (b) the sale of the products produced by the Facilities in any country.

Such indemnity shall not cover any use of the Facilities or any part thereof other than for the purpose indicated by or to be reasonably inferred from the Contract, any infringement resulting from the use of the Facilities or any part thereof, or any products produced thereby in association or combination with any other equipment, plant, or

materials not supplied by the Contractor, pursuant to the Contract Agreement.

29.2 If any proceedings are brought or any claim is made against the Employer arising out of the matters referred to in GCC Subclause 29.1, the Employer shall promptly give the Contractor a notice thereof, and the Contractor may at its own expense and in the Employer's name conduct such proceedings or claim and any negotiations for the settlement of any such proceedings or claim.

If the Contractor fails to notify the Employer within 28 days after receipt of such notice that it intends to conduct any such proceedings or claim, then the Employer shall be free to conduct the same on its own behalf. Unless the Contractor has so failed to notify the Employer within the 28-day period, the Employer shall make no admission that may be prejudicial to the defense of any such proceedings or claim.

The Employer shall, at the Contractor's request, afford all available assistance to the Contractor in conducting such proceedings or claim, and shall be reimbursed by the Contractor for all reasonable expenses incurred in so doing.

29.3 The Employer shall indemnify and hold harmless the Contractor and its employees, officers, and Subcontractors from and against any and all suits, actions or administrative proceedings, claims, demands, losses, damages, costs, and expenses of whatsoever nature, including attorney's fees and expenses, which the Contractor may suffer as a result of any infringement or alleged infringement of any patent, utility model, registered design, trademark, copyright, or other intellectual property right registered or otherwise existing at the date of the Contract arising out of or in connection with any design, data, drawing, specification, or other documents or materials provided or designed by or on behalf of the Employer.

30. Limitation of Liability

30.1 Except in cases of criminal negligence or willful misconduct,

(a) the Contractor shall not be liable to the Employer, whether in contract, tort, or otherwise, for any indirect or consequential loss or damage, loss of use, loss of production, or loss of profits or interest costs, provided that this exclusion shall not apply to any obligation of the Contractor to pay liquidated damages to the Employer, and

(b) the aggregate liability of the Contractor to the Employer, whether under the Contract, in tort or otherwise, shall not exceed a multiple of the Contract Price specified in the SCC or, if a multiple is not so specified, the total Contract Price, provided that this limitation shall not apply to the cost of repairing or replacing defective equipment, or to any obligation of the Contractor to indemnify the Employer with respect to patent infringement.

G. Risk Distribution

31. Transfer of Ownership

31.1 Ownership of the Plant (including spare parts) to be imported into the country where the Site is located shall be transferred to the Employer upon loading on to the mode of transport to be used to convey the Plant from the country of origin to that country.

31.2 Ownership of the Plant (including spare parts) procured in the country where the Site is located shall be transferred to the Employer when the Plant are brought on to the Site.

31.3 Ownership of the Contractor's Equipment used by the Contractor and its Subcontractors in connection with the Contract shall remain with the Contractor or its Subcontractors.

31.4 Ownership of any Plant in excess of the requirements for the Facilities shall revert to the Contractor upon Completion of the Facilities or at such earlier time when the Employer and the Contractor agree that the Plant in question are no longer required for the Facilities.

31.5 Notwithstanding the transfer of ownership of the Plant, the responsibility for care and custody thereof together with the risk of loss or damage thereto shall remain with the Contractor pursuant to GCC Clause 32 (Care of Facilities) hereof until Completion of the Facilities or the part thereof in which such Plant are incorporated.

32. Care of Facilities

32.1 The Contractor shall be responsible for the care and custody of the Facilities or any part thereof until the date of Completion of the Facilities pursuant to GCC Clause 24 or, where the Contract provides for Completion of the Facilities in parts, until the date of Completion of the relevant part, and shall make good at its own cost any loss or damage that may occur to the Facilities or the relevant part thereof from any cause whatsoever during such period. The Contractor shall also be responsible for any loss or damage to the Facilities caused by the Contractor or its Subcontractors in the course of any work carried out, pursuant to GCC Clause 27. Notwithstanding the foregoing, the Contractor shall not be liable for any loss or damage to the Facilities or that part thereof caused by reason of any of the matters specified or referred to in paragraphs (a), (b) and (c) of GCC Subclauses 32.2 and 38.1.

32.2 If any loss or damage occurs to the Facilities or any part thereof or to the Contractor's temporary facilities by reason of

(a) insofar as they relate to the country where the Site is located, nuclear reaction, nuclear radiation, radioactive contamination, pressure wave caused by aircraft or other aerial objects, or any other occurrences that an experienced contractor could not reasonably foresee, or if reasonably foreseeable could not reasonably make provision for or insure against, insofar as such risks are not normally insurable on the insurance market and are mentioned in the general exclusions of the policy of insurance, including War Risks and Political Risks, taken out under GCC Clause 34 hereof; or

(b) any use or occupation by the Employer or any third party other than a Subcontractor, authorized by the Employer of any part of the Facilities; or

(c) any use of or reliance upon any design, data, or specification provided or designated by or on behalf of the Employer, or any such matter for which the Contractor has disclaimed responsibility herein,

the Employer shall pay to the Contractor all sums payable in respect of the Facilities executed, notwithstanding that the same be lost, destroyed, or damaged, and will pay to the Contractor the replacement value of all temporary facilities and all parts thereof lost, destroyed, or damaged. If the Employer requests the Contractor in writing to make good any loss or damage to the Facilities thereby occasioned, the Contractor shall make good the same at the cost of the Employer in accordance with GCC Clause 39. If the Employer does not request the

Contractor in writing to make good any loss or damage to the Facilities thereby occasioned, the Employer shall either request a change in accordance with GCC Clause 39, excluding the performance of that part of the Facilities thereby lost, destroyed or damaged, or, where the loss or damage affects a substantial part of the Facilities, the Employer shall terminate the Contract pursuant to GCC Subclause 42.1 hereof.

32.3 The Contractor shall be liable for any loss of or damage to any Contractor's Equipment, or any other property of the Contractor used or intended to be used for purposes of the Facilities, except (i) as mentioned in GCC Subclause 32.2 with respect to the Contractor's temporary facilities, and (ii) where such loss or damage arises by reason of any of the matters specified in GCC Subclauses 32.2 (b) and (c) and 38.1.

32.4 With respect to any loss or damage caused to the Facilities or any part thereof or to the Contractor's Equipment by reason of any of the matters specified in GCC Subclause 38.1, the provisions of GCC Subclause 38.3 shall apply.

33. Loss of or Damage to Property; Accident or Injury to Workers; Indemnification

33.1 Subject to GCC Subclause 33.3, the Contractor shall indemnify and hold harmless the Employer and its employees and officers from and against any and all suits, actions, or administrative proceedings, claims, demands, losses, damages, costs, and expenses of whatsoever nature, including attorney's fees and expenses, in respect of the death or injury of any person or loss of or damage to any property other than the Facilities whether accepted or not, arising in connection with the supply and installation of the Facilities and by reason of the negligence of the Contractor or its Subcontractors, or their employees, officers, or agents, except any injury, death, or property damage caused by the negligence of the Employer, its contractors, employees, officers, or agents.

33.2 If any proceedings are brought or any claim is made against the Employer that might subject the Contractor to liability under GCC Subclause 33.1, the Employer shall promptly give the Contractor a notice thereof and the Contractor may at its own expense and in the Employer's name conduct such proceedings or claim and any negotiations for the settlement of any such proceedings or claim.

If the Contractor fails to notify the Employer within 28 days after receipt of such notice that it intends to conduct any such proceedings or claim, then the Employer shall be free to conduct the same on its own behalf. Unless the Contractor has so failed to notify the Employer within the 28-day period, the Employer shall make no admission that may be prejudicial to the defense of any such proceedings or claim.

The Employer shall, at the Contractor's request, afford all available assistance to the Contractor in conducting such proceedings or claim, and shall be reimbursed by the Contractor for all reasonable expenses incurred in so doing.

33.3 The Employer shall indemnify and hold harmless the Contractor and its employees, officers, and Subcontractors from any liability for loss of or damage to property of the Employer, other than the Facilities not yet taken over, that is caused by fire, explosion, or any other perils, in excess of the amount recoverable from insurances procured under GCC Clause 34, provided that such fire, explosion, or other perils were not caused by any act or failure of the Contractor.

33.4 The party entitled to the benefit of an indemnity under this GCC Clause 33 shall take all reasonable measures to mitigate any loss or damage which has occurred. If the party fails to take such measures, the other party's liabilities shall be correspondingly reduced.

34. Insurance

34.1 To the extent specified in the Appendix (Insurance Requirements) to the Contract Agreement, the Contractor shall at its expense take out and maintain in effect, or cause to be taken out and maintained in effect, during the performance of the Contract, the insurances set forth below in the sums and with the deductibles and other conditions specified in the said Appendix. The identity of the insurers and the form of the policies shall be subject to the approval of the Employer, who should not unreasonably withhold such approval.

(a) Cargo Insurance During Transport

Covering loss or damage occurring while in transit from the Contractor's or Subcontractor's works or stores until arrival at the Site, to the Plant (including spare parts therefor) and to the Contractor's Equipment.

(b) Installation All Risks Insurance

Covering physical loss or damage to the Facilities at the Site, occurring prior to Completion of the Facilities, with an extended maintenance coverage for the Contractor's liability in respect of any loss or damage occurring during the Defect Liability Period while the Contractor is on the Site for the purpose of performing its obligations during the Defect Liability Period.

(c) Third Party Liability Insurance

Covering bodily injury or death suffered by third parties including the Employer's personnel, and loss of or damage to property occurring in connection with the supply and installation of the Facilities.

(d) Automobile Liability Insurance

Covering use of all vehicles used by the Contractor or its Subcontractors, whether or not owned by them, in connection with the execution of the Contract.

(e) Workers' Compensation

In accordance with the statutory requirements applicable in any country where the Contract or any part thereof is executed.

(f) Employer's Liability

In accordance with the statutory requirements applicable in any country where the Contract or any part thereof is executed.

(g) Other Insurances

Such other insurances as may be specifically agreed upon by the parties hereto as listed in the Appendix (Insurance Requirements) to the Contract Agreement.

34.2 The Employer shall be named as co-insured under all insurance policies taken out by the Contractor pursuant to GCC Subclause 34.1, except for the Third Party Liability, Workers' Compensation, and Employer's Liability Insurances, and the Contractor's Subcontractors shall be named as co-insureds under all insurance policies taken out by the Contractor pursuant to GCC Subclause 34.1 except for the

Cargo Insurance During Transport, Workers' Compensation, and Employer's Liability Insurances. All insurer's rights of subrogation against such co-insureds for losses or claims arising out of the performance of the Contract shall be waived under such policies.

34.3 The Contractor shall, in accordance with the provisions of the Appendix (Insurance Requirements) to the Contract Agreement, deliver to the Employer certificates of insurance or copies of the insurance policies as evidence that the required policies are in full force and effect. The certificates shall provide that no less than 21 days' notice shall be given to the Employer by insurers prior to cancellation or material modification of a policy.

34.4 The Contractor shall ensure that, where applicable, its Subcontractor(s) shall take out and maintain in effect adequate insurance policies for their personnel and vehicles and for work executed by them under the Contract, unless such Subcontractors are covered by the policies taken out by the Contractor.

34.5 The Employer shall at its expense take out and maintain in effect during the performance of the Contract those insurances specified in the Appendix (Insurance Requirements) to the Contract Agreement, in the sums and with the deductibles and other conditions specified in the said Appendix. The Contractor and the Contractor's Subcontractors shall be named as co-insureds under all such policies. All insurers' rights of subrogation against such co-insureds for losses or claims arising out of the performance of the Contract shall be waived under such policies. The Employer shall deliver to the Contractor satisfactory evidence that the required insurances are in full force and effect. The policies shall provide that not less than 21 days' notice shall be given to the Contractor by all insurers prior to any cancellation or material modification of the policies. If so requested by the Contractor, the Employer shall provide copies of the policies taken out by the Employer under this GCC Subclause 34.5.

34.6 If the Contractor fails to take out and/or maintain in effect the insurances referred to in GCC Subclause 34.1, the Employer may take out and maintain in effect any such insurances and may from time to time deduct from any amount due the Contractor under the Contract any premium that the Employer shall have paid to the insurer, or may otherwise recover such amount as a debt due from the Contractor. If the Employer fails to take out and/or maintain in effect the insurances referred to in GCC 34.5, the Contractor may take out and maintain in effect any such insurances and may from time to time deduct from any amount due the Employer under the Contract any premium that the Contractor shall have paid to the insurer, or may otherwise recover such amount as a debt due from the Employer. If the Contractor fails to or is unable to take out and maintain in effect any such insurances, the Contractor shall nevertheless have no liability or responsibility towards the Employer, and the Contractor shall have full recourse against the Employer for any and all liabilities of the Employer herein.

34.7 Unless otherwise provided in the Contract, the Contractor shall prepare and conduct all and any claims made under the policies effected by it pursuant to this GCC Clause 34, and all monies payable by any insurers shall be paid to the Contractor. The Employer shall give to the Contractor all such reasonable assistance as may be required by the Contractor. With respect to insurance claims in which the Employer's interest is involved, the Contractor shall not give any release or make any compromise with the insurer without the prior written consent of

the Employer. With respect to insurance claims in which the Contractor's interest is involved, the Employer shall not give any release or make any compromise with the insurer without the prior written consent of the Contractor.

35. Unforeseen Conditions

35.1 If, during the execution of the Contract, the Contractor shall encounter on the Site any physical conditions other than climatic conditions, or artificial obstructions that could not have been reasonably foreseen prior to the date of the Contract Agreement by an experienced contractor on the basis of reasonable examination of the data relating to the Facilities including any data as to boring tests, provided by the Employer, and on the basis of information that it could have obtained from a visual inspection of the Site if access thereto was available, or other data readily available to it relating to the Facilities, and if the Contractor determines that it will in consequence of such conditions or obstructions incur additional cost and expense or require additional time to perform its obligations under the Contract that would not have been required if such physical conditions or artificial obstructions had not been encountered, the Contractor shall promptly, and before performing additional work or using additional Plant or Contractor's Equipment, notify the Project Manager in writing of

(a) the physical conditions or artificial obstructions on the Site that could not have been reasonably foreseen;

(b) the additional work and/or Plant and/or Contractor's Equipment required, including the steps which the Contractor will or proposes to take to overcome such conditions or obstructions;

(c) the extent of the anticipated delay; and

(d) the additional cost and expense that the Contractor is likely to incur.

On receiving any notice from the Contractor under this GCC Subclause 35.1, the Project Manager shall promptly consult with the Employer and Contractor and decide upon the actions to be taken to overcome the physical conditions or artificial obstructions encountered. Following such consultations, the Project Manager shall instruct the Contractor, with a copy to the Employer, of the actions to be taken.

35.2 Any reasonable additional cost and expense incurred by the Contractor in following the instructions from the Project Manager to overcome such physical conditions or artificial obstructions referred to in GCC Subclause 35.1 shall be paid by the Employer to the Contractor as an addition to the Contract Price.

35.3 If the Contractor is delayed or impeded in the performance of the Contract because of any such physical conditions or artificial obstructions referred to in GCC Subclause 35.1, the Time for Completion shall be extended in accordance with GCC Clause 40.

36. Change in Laws and Regulations

36.1 If, after the date 28 days prior to the date of Bid submission, in the country where the Site is located, any law, regulation, ordinance, order or by-law having the force of law is enacted, promulgated, abrogated, or changed, which shall be deemed to include any change in interpretation or application by the competent authorities, that subsequently affects the costs and expenses of the Contractor and/or the Time for Completion, the Contract Price shall be correspondingly increased or decreased, and/or the Time for Completion shall be

reasonably adjusted to the extent that the Contractor has thereby been affected in the performance of any of its obligations under the Contract. Notwithstanding the foregoing, such additional or reduced costs shall not be separately paid or credited if the same has already been accounted for in the price adjustment provisions where applicable, in accordance with the SCC, pursuant to GCC Subclause 11.2.

37. Force Majeure

37.1 "Force Majeure" shall mean any event beyond the reasonable control of the Employer or of the Contractor, as the case may be, and which is unavoidable notwithstanding the reasonable care of the party affected, and shall include, without limitation, the following:

(a) war, hostilities, or warlike operations whether a state of war be declared or not, invasion, act of foreign enemy and civil war;

(b) rebellion, revolution, insurrection, mutiny, usurpation of civil or military government, conspiracy, riot, civil commotion, and terrorist acts;

(c) confiscation, nationalization, mobilization, commandeering or requisition by or under the order of any government or de jure or de facto authority or ruler or any other act or failure to act of any local state or national government authority;

(d) strike, sabotage, lockout, embargo, import restriction, port congestion, lack of usual means of public transportation and communication, industrial dispute, shipwreck, shortage or restriction of power supply, epidemics, quarantine, and plague;

(e) earthquake, landslide, volcanic activity, fire, flood or inundation, tidal wave, typhoon or cyclone, hurricane, storm, lightning, or other inclement weather condition, nuclear, and pressure waves or other natural or physical disaster; and

(f) shortage of labor, materials, or utilities where caused by circumstances that are themselves Force Majeure.

37.2 If either party is prevented, hindered, or delayed from or in performing any of its obligations under the Contract by an event of Force Majeure, then it shall notify the other in writing of the occurrence of such event and the circumstances thereof within 14 days after the occurrence of such event.

37.3 The party who has given such notice shall be excused from the performance or punctual performance of its obligations under the Contract for so long as the relevant event of Force Majeure continues and to the extent that such party's performance is prevented, hindered, or delayed. The Time for Completion shall be extended in accordance with GCC Clause 40.

37.4 The party or parties affected by the event of Force Majeure shall use reasonable efforts to mitigate the effect thereof upon its or their performance of the Contract and to fulfill its or their obligations under the Contract, but without prejudice to either party's right to terminate the Contract under GCC Subclauses 37.6 and 38.5.

37.5 No delay or nonperformance by either party hereto caused by the occurrence of any event of Force Majeure shall

(a) constitute a default or breach of the Contract; or

(b) give rise to any claim for damages or additional cost or expense

occasioned thereby, subject to GCC Subclauses 32.2, 38.3 and 38.4

if and to the extent that such delay or nonperformance is caused by the occurrence of an event of Force Majeure.

37.6 If the performance of the Contract is substantially prevented, hindered, or delayed for a single period of more than 60 days or an aggregate period of more than 120 days on account of one or more events of Force Majeure during the currency of the Contract, the parties will attempt to develop a mutually satisfactory solution, failing which either party may terminate the Contract by giving a notice to the other, but without prejudice to either party's right to terminate the Contract under GCC Subclause 38.5.

37.7 In the event of termination pursuant to GCC Subclause 37.6, the rights and obligations of the Employer and the Contractor shall be as specified in GCC Subclauses 42.1.2 and 42.1.3.

37.8 Notwithstanding GCC Subclause 37.5, Force Majeure shall not apply to any obligation of the Employer to make payments to the Contractor herein.

38. War Risks

38.1 "War Risks" shall mean any event specified in paragraphs (a) and (b) of GCC Subclause 37.1 and any explosion or impact of any mine, bomb, shell, grenade, or other projectile, missile, munitions or explosive of war, occurring or existing in or near the country (or countries) where the Site is located.

38.2 Notwithstanding anything contained in the Contract, the Contractor shall have no liability whatsoever for or with respect to

(a) destruction of or damage to Facilities, Plant, or any part thereof;

(b) destruction of or damage to property of the Employer or any third party; or

(c) injury or loss of life

if such destruction, damage, injury or loss of life is caused by any war risks, and the Employer shall indemnify and hold the Contractor harmless from and against any and all claims, liabilities, actions, lawsuits, damages, costs, charges, or expenses arising in consequence of or in connection with the same.

38.3 If the Facilities or any Plant or Contractor's Equipment or any other property of the Contractor used or intended to be used for the purposes of the Facilities shall sustain destruction or damage by reason of any war risks, the Employer shall pay the Contractor for

(a) any part of the Facilities or the Plant so destroyed or damaged to the extent not already paid for by the Employerand so far as may be required by the Employer, and as may be necessary for completion of the Facilities;

(b) replacing or making good any Contractor's Equipment or other property of the Contractor so destroyed or damaged; and

(c) replacing or making good any such destruction or damage to the Facilities or the Plant or any part thereof.

If the Employer does not require the Contractor to replace or make good any such destruction or damage to the Facilities, the Employer

shall either request a change in accordance with GCC Clause 39, excluding the performance of that part of the Facilities thereby destroyed or damaged or, where the loss, destruction, or damage affects a substantial part of the Facilities, shall terminate the Contract, pursuant to GCC Subclause 42.1.

If the Employer requires the Contractor to replace or make good on any such destruction or damage to the Facilities, the Time for Completion shall be extended in accordance with GCC 40.

38.4 Notwithstanding anything contained in the Contract, the Employer shall pay the Contractor for any increased costs or incidentals to the execution of the Contract that are in any way attributable to, consequent on, resulting from, or in any way connected with any war risks, provided that the Contractor shall as soon as practicable notify the Employer in writing of any such increased cost.

38.5 If during the performance of the Contract any war risks shall occur that financially or otherwise materially affect the execution of the Contract by the Contractor, the Contractor shall use its reasonable efforts to execute the Contract with due and proper consideration given to the safety of its and its Subcontractors' personnel engaged in the work on the Facilities, provided, however, that if the execution of the work on the Facilities becomes impossible or is substantially prevented for a single period of more than sixty (60) days or an aggregate period of more than one hundred and twenty (120) days on account of any war risks, the parties will attempt to develop a mutually satisfactory solution, failing which either party may terminate the Contract by giving a notice to the other.

38.6 In the event of termination pursuant to GCC Subclauses 38.3 or 38.5, the rights and obligations of the Employer and the Contractor shall be specified in GCC Subclauses 42.1.2 and 42.1.3.

H. Change in Contract Elements

39. Change in the Facilities

39.1 <u>Introducing a Change</u>

39.1.1 Subject to GCC Subclauses 39.2.5 and 39.2.7, the Employer shall have the right to propose, and subsequently require, that the Project Manager order the Contractor from time to time during the performance of the Contract to make any change, modification, addition, or deletion to, in or from the Facilities hereinafter called "Change," provided that such Change falls within the general scope of the Facilities and does not constitute unrelated work and that it is technically practicable, taking into account both the state of advancement of the Facilities and the technical compatibility of the Change envisaged with the nature of the Facilities as specified in the Contract.

39.1.2 The Contractor may from time to time during its performance of the Contract propose to the Employer with a copy to the Project Manager, any Change that the Contractor considers necessary or desirable to improve the quality, efficiency, or safety of the Facilities. The Employer may at its discretion approve or reject any Change proposed by the Contractor, provided that the Employer shall approve any Change proposed by the Contractor to ensure the safety of the Facilities.

39.1.3 Notwithstanding GCC Subclauses 39.1.1 and 39.1.2, no change made necessary because of any default of the Contractor in the performance of its obligations under the Contract shall be deemed to be a Change, and such change shall not result in any adjustment of the Contract Price or the Time for Completion.

39.1.4 The procedure on how to proceed with and execute Changes is specified in GCC Subclauses 39.2 and 39.3, and further details and forms are provided in the Employer's Requirements (Forms and Procedures).

39.2 Changes Originating from Employer

39.2.1 If the Employer proposes a Change pursuant to GCC Subclause 39.1.1, it shall send to the Contractor a "Request for Change Proposal," requiring the Contractor to prepare and furnish to the Project Manager as soon as reasonably practicable a "Change Proposal," which shall include the following:

(a) brief description of the Change,

(b) effect on the Time for Completion,

(c) estimated cost of the Change,

(d) effect on Functional Guarantees (if any),

(e) effect on the Facilities, and

(f) effect on any other provisions of the Contract.

39.2.2 Prior to preparing and submitting the "Change Proposal," the Contractor shall submit to the Project Manager an "Estimate for Change Proposal," which shall be an estimate of the cost of preparing and submitting the Change Proposal.

Upon receipt of the Contractor's Estimate for Change Proposal, the Employer shall do one of the following:

(a) accept the Contractor's estimate with instructions to the Contractor to proceed with the preparation of the Change Proposal,

(b) advise the Contractor of any part of its Estimate for Change Proposal that is unacceptable and request the Contractor to review its estimate

(c) advise the Contractor that the Employer does not intend to proceed with the Change.

39.2.3 Upon receipt of the Employer's instruction to proceed under GCC Subclause 39.2.2 (a), the Contractor shall, with proper expedition, proceed with the preparation of the Change Proposal, in accordance with GCC Subclause 39.2.1.

39.2.4 The pricing of any Change shall, as far as practicable, be calculated in accordance with the rates and prices included in the Contract. If such rates and prices are inequitable, the parties thereto shall agree on specific rates for the valuation of the Change.

39.2.5 If before or during the preparation of the Change Proposal it

becomes apparent that the aggregate effect of compliance therewith and with all other Change Orders that have already become binding upon the Contractor under this GCC Clause 39 would be to increase or decrease the Contract Price as originally set forth in Article 2 (Contract Price) of the Contract Agreement by more than 15%, the Contractor may give a written notice of objection thereto prior to furnishing the Change Proposal as aforesaid. If the Employer accepts the Contractor's objection, the Employer shall withdraw the proposed Change and shall notify the Contractor in writing thereof.

The Contractor's failure to so object shall neither affect its right to object to any subsequent requested Changes or Change Orders herein, nor affect its right to take into account, when making such subsequent objection, the percentage increase or decrease in the Contract Price that any Change not objected to by the Contractor represents.

39.2.6 Upon receipt of the Change Proposal, the Employer and the Contractor shall mutually agree upon all matters therein contained. Within 14 days after such agreement, the Employer shall, if it intends to proceed with the Change, issue the Contractor with a Change Order.

If the Employer is unable to reach a decision within 14 days, it shall notify the Contractor with details of when the Contractor can expect a decision.

If the Employer decides not to proceed with the Change for whatever reason, it shall, within the said period of 14 days, notify the Contractor accordingly. Under such circumstances, the Contractor shall be entitled to reimbursement of all costs reasonably incurred by it in the preparation of the Change Proposal, provided that these do not exceed the amount given by the Contractor in its Estimate for Change Proposal submitted in accordance with GCC Subclause 39.2.2.

39.2.7 If the Employer and the Contractor cannot reach agreement on the price for the Change, an equitable adjustment to the Time for Completion, or any other matters identified in the Change Proposal, the Employer may nevertheless instruct the Contractor to proceed with the Change by issue of a "Pending Agreement Change Order."

Upon receipt of a Pending Agreement Change Order, the Contractor shall immediately proceed with effecting the Changes covered by such Order. The parties shall thereafter attempt to reach agreement on the outstanding issues under the Change Proposal.

If the parties cannot reach agreement within 60 days from the date of issue of the Pending Agreement Change Order, then the matter may be referred to the Dispute Board in accordance with the provisions of GCC Subclause 45.3.

39.3 <u>Changes Originating from Contractor</u>

39.3.1 If the Contractor proposes a Change pursuant to GCC Subclause 39.1.2, the Contractor shall submit to the Project Manager a written "Application for Change Proposal," giving reasons for the

proposed Change and including the information specified in GCC Subclause 39.2.1.

Upon receipt of the Application for Change Proposal, the parties shall follow the procedures outlined in GCC Subclauses 39.2.6 and 39.2.7. However, should the Employer choose not to proceed, the Contractor shall not be entitled to recover the costs of preparing the Application for Change Proposal.

40. Extension of Time for Completion

40.1 The Time(s) for Completion specified in the SCC shall be extended if the Contractor is delayed or impeded in the performance of any of its obligations under the Contract by reason of any of the following:

(a) any Change in the Facilities as provided in GCC Clause 39;

(b) any occurrence of Force Majeure as provided in GCC Clause 37, unforeseen conditions as provided in GCC Clause 35, or other occurrence of any of the matters specified or referred to in paragraphs (a), (b) and (c) of GCC Subclause 32.2;

(c) any suspension order given by the Employer under GCC Clause 41 hereof or reduction in the rate of progress pursuant to GCC Subclause 41.2; or

(d) any changes in laws and regulations as provided in GCC Clause 36; or

(e) any default or breach of the Contract by the Employer, or any activity, act or omission of the Employer, or the Project Manager, or any other contractors employed by the Employer; or

(f) any other matter specifically mentioned in the Contract; or

(g) any delay on the part of a sub-contractor, provided such delay is due to a cause for which the Contractor himself would have been entitled to an extension of time under this Subclause

by such period as shall be fair and reasonable in all the circumstances and as shall fairly reflect the delay or impediment sustained by the Contractor.

40.2 Except where otherwise specifically provided in the Contract, the Contractor shall submit to the Project Manager a notice of a claim for an extension of the Time for Completion, together with particulars of the event or circumstance justifying such extension as soon as reasonably practicable after the commencement of such event or circumstance. As soon as reasonably practicable after receipt of such notice and supporting particulars of the claim, the Employer and the Contractor shall agree upon the period of such extension. In the event that the Contractor does not accept the Employer's estimate of a fair and reasonable time extension, the Contractor shall be entitled to refer the matter to a Dispute Board, pursuant to GCC Subclause 45.3.

40.3 The Contractor shall at all times use its reasonable efforts to minimize any delay in the performance of its obligations under the Contract.

In all cases where the Contractor has given a notice of a claim for an extension of time under GCC 40.2, the Contractor shall consult with the Project Manager in order to determine the steps (if any) which can be taken to overcome or minimize the actual or anticipated delay. The Contractor shall there after comply with all reasonable instructions,

which the Project Manager shall give in order to minimize such delay. If compliance with such instructions shall cause the Contractor to incur extra costs and the Contractor is entitled to an extension of time under GCC 40.1, the amount of such extra costs shall be added to the Contract Price.

41. Suspension

41.1 The Employer may request the Project Manager, by notice to the Contractor, to order the Contractor to suspend performance of any or all of its obligations under the Contract. Such notice shall specify the obligation of which performance is to be suspended, the effective date of the suspension and the reasons therefor. The Contractor shall thereupon suspend performance of such obligation, except those obligations necessary for the care or preservation of the Facilities, until ordered in writing to resume such performance by the Project Manager.

If, by virtue of a suspension order given by the Project Manager, other than by reason of the Contractor's default or breach of the Contract, the Contractor's performance of any of its obligations is suspended for an aggregate period of more than 90 days, then at any time thereafter and provided that at that time such performance is still suspended, the Contractor may give a notice to the Project Manager requiring that the Employer shall, within 28 days of receipt of the notice, order the resumption of such performance or request and subsequently order a change in accordance with GCC Clause 39, excluding the performance of the suspended obligations from the Contract.

If the Employer fails to do so within such period, the Contractor may, by a further notice to the Project Manager, elect to treat the suspension, where it affects a part only of the Facilities, as a deletion of such part in accordance with GCC Clause 39 or, where it affects the whole of the Facilities, as termination of the Contract under GCC Subclause 42.1.

41.2 If

(a) the Employer has failed to pay the Contractor any sum due under the Contract within the specified period, has failed to approve any invoice or supporting documents without just cause pursuant to the Appendix (Terms and Procedures of Payment) to the Contract Agreement, or commits a substantial breach of the Contract, the Contractor may give a notice to the Employer that requires payment of such sum, with interest thereon as stipulated in GCC Subclause 12.3, requires approval of such invoice or supporting documents, or specifies the breach and requires the Employer to remedy the same, as the case may be. If the Employer fails to pay such sum together with such interest, fails to approve such invoice or supporting documents or give its reasons for withholding such approval, or fails to remedy the breach or take steps to remedy the breach within 14 days after receipt of the Contractor's notice; or

(b) the Contractor is unable to carry out any of its obligations under the Contract for any reason attributable to the Employer, including but not limited to the Employer's failure to provide possession of or access to the Site or other areas in accordance with GCC Subclause 10.2, or failure to obtain any governmental permit necessary for the execution and/or completion of the Facilities,

then the Contractor may by 14 days' notice to the Employer suspend performance of all or any of its obligations under the Contract, or reduce

the rate of progress.

41.3 If the Contractor's performance of its obligations is suspended, or the rate of progress is reduced pursuant to this GCC Clause 41, then the Time for Completion shall be extended in accordance with GCC Subclause 40.1, and any and all additional costs or expenses incurred by the Contractor as a result of such suspension or reduction shall be paid by the Employer to the Contractor in addition to the Contract Price, except in the case of suspension order or reduction in the rate of progress by reason of the Contractor's default or breach of the Contract.

41.4 During the period of suspension, the Contractor shall not remove from the Site any Plant, any part of the Facilities or any Contractor's Equipment, without the prior written consent of the Employer.

42. Termination

42.1 Termination for Employer's Convenience

42.1.1 The Employer may at any time terminate the Contract for any reason by giving the Contractor a notice of termination that refers to this GCC Subclause 42.1.

42.1.2 Upon receipt of the notice of termination under GCC Subclause 42.1.1, the Contractor shall, either immediately or upon the date specified in the notice of termination,

(a) cease all further work, except for such work as the Employer may specify in the notice of termination for the sole purpose of protecting that part of the Facilities already executed, or any work required to leave the Site in a clean and safe condition;

(b) terminate all subcontracts, except those to be assigned to the Employer pursuant to paragraph (d) (ii) below;

(c) remove all Contractor's Equipment from the Site, repatriate the Contractor's and its Subcontractors' personnel from the Site, remove from the Site any wreckage, rubbish and debris of any kind, and leave the whole of the Site in a clean and safe condition; and

(d) subject to the payment specified in GCC Subclause 42.1.3,

(i) deliver to the Employer the parts of the Facilities executed by the Contractor up to the date of termination;

(ii) to the extent legally possible, assign to the Employer all right, title and benefit of the Contractor to the Facilities and to the Plant as of the date of termination, and, as may be required by the Employer, in any subcontracts concluded between the Contractor and its Subcontractors; and

(iii) deliver to the Employer all non-proprietary drawings, specifications and other documents prepared by the Contractor or its Subcontractors as at the date of termination in connection with the Facilities.

42.1.3 In the event of termination of the Contract under GCC Subclause 42.1.1, the Employer shall pay to the Contractor the following amounts:

(a) the Contract Price, properly attributable to the parts of the

Facilities executed by the Contractor as of the date of termination;

(b) the costs reasonably incurred by the Contractor in the removal of the Contractor's Equipment from the Site and in the repatriation of the Contractor's and its Subcontractors' personnel;

(c) any amounts to be paid by the Contractor to its Subcontractors in connection with the termination of any subcontracts, including any cancellation charges;

(d) costs incurred by the Contractor in protecting the Facilities and leaving the Site in a clean and safe condition pursuant to paragraph (a) of GCC Subclause 42.1.2; and

(e) the cost of satisfying all other obligations, commitments and claims that the Contractor may in good faith have undertaken with third parties in connection with the Contract and that are not covered by paragraphs (a) through (d) above.

42.2 Termination for Contractor's Default

42.2.1 The Employer, without prejudice to any other rights or remedies it may possess, may terminate the Contract forthwith in the following circumstances by giving a notice of termination and its reasons therefor to the Contractor, referring to this GCC Subclause 42.2:

(a) if the Contractor becomes bankrupt or insolvent, has a receiving order issued against it, compounds with its creditors, or, if the Contractor is a corporation, a resolution is passed or order is made for its winding up, other than a voluntary liquidation for the purposes of amalgamation or reconstruction, a receiver is appointed over any part of its undertaking or assets, or if the Contractor takes or suffers any other analogous action in consequence of debt;

(b) if the Contractor assigns or transfers the Contract or any right or interest therein in violation of the provision of GCC Clause 43; and

(c) if the Contractor, in the judgment of the Employer has engaged in integrity violations, as defined in GCC Clause 6, in competing for or in executing the Contract.

42.2.2 If the Contractor

(a) has abandoned or repudiated the Contract;

(b) has without valid reason failed to commence work on the Facilities promptly or has suspended, other than pursuant to GCC Subclause 41.2, the progress of Contract performance for more than 28 days after receiving a written instruction from the Employer to proceed;

(c) persistently fails to execute the Contract in accordance with the Contract or persistently neglects to carry out its obligations under the Contract without just cause;

(d) refuses or is unable to provide sufficient materials, services or labor to execute and complete the Facilities in the manner specified in the program furnished under GCC Subclause 18.2 at rates of progress that give reasonable assurance to the Employer that the Contractor can attain Completion of the Facilities by the Time for Completion as extended;

then the Employer may, without prejudice to any other rights it may possess under the Contract, give a notice to the Contractor, stating the nature of the default and requiring the Contractor to remedy the same. If the Contractor fails to remedy or to take steps to remedy the same within 14 days of its receipt of such notice, then the Employer may terminate the Contract forthwith by giving a notice of termination to the Contractor that refers to this GCC Subclause 42.2.

42.2.3 Upon receipt of the notice of termination under GCC Subclauses 42.2.1 or 42.2.2, the Contractor shall, either immediately or upon such date as is specified in the notice of termination,

(a) cease all further work, except for such work as the Employer may specify in the notice of termination for the sole purpose of protecting that part of the Facilities already executed, or any work required to leave the Site in a clean and safe condition;

(b) terminate all subcontracts, except those to be assigned to the Employer pursuant to paragraph (d) below;

(c) deliver to the Employer the parts of the Facilities executed by the Contractor up to the date of termination;

(d) to the extent legally possible, assign to the Employer all right, title and benefit of the Contractor to the Facilities and to the Plant as of the date of termination, and, as may be required by the Employer, in any subcontracts concluded between the Contractor and its Subcontractors; and

(e) deliver to the Employer all drawings, specifications and other documents prepared by the Contractor or its Subcontractors as of the date of termination in connection with the Facilities.

42.2.4 The Employer may enter upon the Site, expel the Contractor, and complete the Facilities itself or by employing any third party. The Employer may, to the exclusion of any right of the Contractor over the same, take over and use with the payment of a fair rental rate to the Contractor, with all the maintenance costs to the account of the Employer and with an indemnification by the Employer for all liability including damage or injury to persons arising out of the Employer's use of such equipment, any Contractor's Equipment owned by the Contractor and on the Site in connection with the Facilities for such reasonable period as the Employer considers expedient for the supply and installation of the Facilities.

Upon completion of the Facilities or at such earlier date as the Employer thinks appropriate, the Employer shall give notice to the Contractor that such Contractor's Equipment will be returned to the Contractor at or near the Site and shall return such Contractor's Equipment to the Contractor in accordance with

such notice. The Contractor shall thereafter without delay and at its cost remove or arrange removal of the same from the Site.

42.2.5 Subject to GCC Subclause 42.2.6, the Contractor shall be entitled to be paid the Contract Price attributable to the Facilities executed as of the date of termination, the value of any unused or partially used Plant on the Site, and the costs, if any, incurred in protecting the Facilities and in leaving the Site in a clean and safe condition pursuant to paragraph (a) of GCC Subclause 42.2.3. Any sums due the Employer from the Contractor accruing prior to the date of termination shall be deducted from the amount to be paid to the Contractor under this Contract.

42.2.6 If the Employer completes the Facilities, the cost of completing the Facilities by the Employer shall be determined.

If the sum that the Contractor is entitled to be paid, pursuant to GCC Subclause 42.2.5, plus the reasonable costs incurred by the Employer in completing the Facilities, exceeds the Contract Price, the Contractor shall be liable for such excess.

If such excess is greater than the sums due the Contractor under GCC Subclause 42.2.5, the Contractor shall pay the balance to the Employer, and if such excess is less than the sums due the Contractor under GCC Subclause 42.2.5, the Employer shall pay the balance to the Contractor.

The Employer and the Contractor shall agree, in writing, on the computation described above and the manner in which any sums shall be paid.

42.3 <u>Termination by Contractor</u>

42.3.1 If

(a) the Employer has failed to pay the Contractor any sum due under the Contract within the specified period, has failed to approve any invoice or supporting documents without just cause pursuant to the Appendix (Terms and Procedures of Payment) to the Contract Agreement, or commits a substantial breach of the Contract, the Contractor may give a notice to the Employer that requires payment of such sum, with interest thereon as stipulated in GCC Subclause 12.3, requires approval of such invoice or supporting documents, or specifies the breach and requires the Employer to remedy the same, as the case may be. If the Employer fails to pay such sum together with such interest, fails to approve such invoice or supporting documents or give its reasons for withholding such approval, fails to remedy the breach or take steps to remedy the breach within 14 days after receipt of the Contractor's notice; or

(b) the Contractor is unable to carry out any of its obligations under the Contract for any reason attributable to the Employer, including but not limited to the Employer's failure to provide possession of or access to the Site or other areas or failure to obtain any governmental permit necessary for the execution and/or completion of the Facilities;

then the Contractor may give a notice to the Employer thereof, and if the Employer has failed to pay the outstanding sum, to approve the invoice or supporting documents, to give its reasons

for withholding such approval, or to remedy the breach within 28 days of such notice, or if the Contractor is still unable to carry out any of its obligations under the Contract for any reason attributable to the Employer within 28 days of the said notice, the Contractor may by a further notice to the Employer referring to this GCC Subclause 42.3.1, forthwith terminate the Contract.

42.3.2 The Contractor may terminate the Contract forthwith by giving a notice to the Employer to that effect, referring to this GCC Subclause 42.3.2, if the Employer becomes bankrupt or insolvent, has a receiving order issued against it, compounds with its creditors, or, being a corporation, if a resolution is passed or order is made for its winding up (other than a voluntary liquidation for the purposes of amalgamation or reconstruction), a receiver is appointed over any part of its undertaking or assets, or if the Employer takes or suffers any other analogous action in consequence of debt.

42.3.3 If the Contract is terminated under GCC Subclauses 42.3.1 or 42.3.2, then the Contractor shall immediately

(a) cease all further work, except for such work as may be necessary for the purpose of protecting that part of the Facilities already executed, or any work required to leave the Site in a clean and safe condition;

(b) terminate all subcontracts, except those to be assigned to the Employer pursuant to paragraph (d) (ii);

(c) remove all Contractor's Equipment from the Site and repatriate the Contractor's and its Subcontractors' personnel from the Site; and

(d) subject to the payment specified in GCC Subclause 42.3.4,

(i) deliver to the Employer the parts of the Facilities executed by the Contractor up to the date of termination;

(ii) to the extent legally possible, assign to the Employer all right, title and benefit of the Contractor to the Facilities and to the Plant as of the date of termination, and, as may be required by the Employer, in any subcontracts concluded between the Contractor and its Subcontractors; and

(iii) deliver to the Employer all drawings, specifications and other documents prepared by the Contractor or its Subcontractors as of the date of termination in connection with the Facilities.

42.3.4 If the Contract is terminated under GCC Subclauses 42.3.1 or 42.3.2, the Employer shall pay to the Contractor all payments specified in GCC Subclause 42.1.3, and reasonable compensation for all loss, except for loss of profit, or damage sustained by the Contractor arising out of, in connection with or in consequence of such termination.

42.3.5 Termination by the Contractor pursuant to this GCC Subclause 42.3 is without prejudice to any other rights or remedies of the Contractor that may be exercised in lieu of or in addition to rights conferred by GCC Subclause 42.3.

42.4 In this GCC Clause 42, the expression "Facilities executed" shall include

all work executed, Installation Services provided, and all Plant acquired, or subject to a legally binding obligation to purchase, by the Contractor and used or intended to be used for the purpose of the Facilities, up to and including the date of termination.

42.5 In this GCC Clause 42, in calculating any monies due from the Employer to the Contractor, account shall be taken of any sum previously paid by the Employer to the Contractor under the Contract, including any advance payment paid pursuant to the Appendix (Terms and Procedures of Payment) to the Contract Agreement.

43. Assignment

43.1 Neither the Employer nor the Contractor shall, without the express prior written consent of the other party which consent shall not be unreasonably withheld, assign to any third party the Contract or any part thereof, or any right, benefit, obligation or interest therein or thereunder, except that the Contractor shall be entitled to assign either absolutely or by way of charge any monies due and payable to it or that may become due and payable to it under the Contract.

I. Claims, Disputes, and Arbitration

44. Contractor's Claims

44.1 If the Contractor considers himself to be entitled to any extension of the Time for Completion and/or any additional payment, under any Clause of these Conditions or otherwise in connection with the Contract, the Contractor shall submit a notice to the Project Manager, describing the event or circumstance giving rise to the claim. The notice shall be given as soon as practicable, and not later than 28 days after the Contractor became aware, or should have become aware, of the event or circumstance.

If the Contractor fails to give notice of a claim within such period of 28 days, the Time for Completion shall not be extended, the Contractor shall not be entitled to additional payment, and the Employer shall be discharged from all liability in connection with the claim. Otherwise, the following provisions of this Subclause shall apply.

The Contractor shall also submit any other notices, which are required by the Contract, and supporting particulars for the claim, all as relevant to such event or circumstance.

The Contractor shall keep such contemporary records as may be necessary to substantiate any claim, either on the Site or at another location acceptable to the Project Manager. Without admitting the Employer's liability, the Project Manager may, after receiving any notice under this Subclause, monitor the recordkeeping and/or instruct the Contractor to keep further contemporary records. The Contractor shall permit the Project Manager to inspect all these records, and shall (if instructed) submit copies to the Project Manager.

Within 42 days after the Contractor became aware (or should have become aware) of the event or circumstance giving rise to the claim, or within such other period as may be proposed by the Contractor and approved by the Project Manager, the Contractor shall send to the Project Manager a fully detailed claim, which includes full supporting particulars of the basis of the claim and of the extension of time and/or additional payment claimed. If the event or circumstance giving rise to the claim has a continuing effect,

(a) this fully detailed claim shall be considered as interim;

(b) the Contractor shall send further interim claims at monthly intervals, giving the accumulated delay and/or amount claimed, and such further particulars as the Project Manager may reasonably require; and

(c) the Contractor shall send a final claim within 28 days after the end of the effects resulting from the event or circumstance, or within such other period as may be proposed by the Contractor and approved by the Project Manager.

Within 42 days after receiving a claim or any further particulars supporting a previous claim, or within such other period as may be proposed by the Project Manager and approved by the Contractor, the Project Manager shall respond with approval, or with disapproval and detailed comments. He may also request any necessary further particulars, but shall nevertheless give his response on the principles of the claim within such time.

Each payment certificate shall include such amounts for any claim as have been reasonably substantiated as due under the relevant provision of the Contract. Unless and until the particulars supplied are sufficient to substantiate the whole of the claim, the Contractor shall only be entitled to payment for such part of the claim as he has been able to substantiate.

The Project Manager shall agree with the Contractor or estimate: (i) the extension (if any) of the Time for Completion (before or after its expiry) in accordance with GCC Clause 40, and/or (ii) the additional payment (if any) to which the Contractor is entitled under the Contract.

The requirements of this Subclause are in addition to those of any other Subclause, which may apply to a claim. If the Contractor fails to comply with this or another Subclause in relation to any claim, any extension of time and/or additional payment shall take account of the extent (if any) to which the failure has prevented or prejudiced proper investigation of the claim, unless the claim is excluded under the second paragraph of this Subclause.

In the event that the Contractor and the Employer cannot agree on any matter relating to a claim, either party may refer the matter to the Dispute Board pursuant to GCC 45 hereof.

45. Disputes and Arbitration

45.1 Appointment of the Dispute Board

Disputes shall be referred to a Dispute Board for decision in accordance with GCC Subclause 45.3. The Parties shall appoint a Dispute Board by the date stated in the SCC.

The Dispute Board shall comprise, as stated in the SCC, either one or three suitably qualified persons (“the members”), each of whom shall be fluent in the language for communication defined in the Contract and shall be a professional experienced in the type of activities involved in the performance of the Contract and with the interpretation of contractual documents. If the number is not so stated and the Parties do not agree otherwise, the Dispute Board shall comprise three persons, one of whom shall serve as chairman.

If the Parties have not jointly appointed the Dispute Board 21 days before the date stated in the SCC and the Dispute Board is to comprise

three persons, each Party shall nominate one member for the approval of the other Party. The first two members shall recommend and the Parties shall agree upon the third member, who shall act as chairman.

However, if a list of potential members is included in the SCC, the members shall be selected from those on the list, other than anyone who is unable or unwilling to accept appointment to the Dispute Board.

The agreement between the Parties and either the sole member or each of the three members shall incorporate by reference the General Conditions of Dispute Board Agreement contained in the Appendix to these General Conditions, with such amendments as are agreed between them.

The terms of the remuneration of either the sole member or each of the three members, including the remuneration of any expert whom the Dispute Board consults, shall be mutually agreed upon by the Parties when agreeing the terms of appointment of the member or such expert (as the case may be). Each Party shall be responsible for paying one-half of this remuneration.

If a member declines to act or is unable to act as a result of death, disability, resignation or termination of appointment, a replacement shall be appointed in the same manner as the replaced person was required to have been nominated or agreed upon, as described in this Subclause.

The appointment of any member may be terminated by mutual agreement of both Parties, but not by the Employer or the Contractor acting alone. Unless otherwise agreed by both Parties, the appointment of the Dispute Board (including each member) shall expire when the Operational Acceptance Certificate has been issued in accordance with GCC Clause 25.3.

45.2 Failure to Agree Dispute Board

If any of the following conditions apply, namely:

(a) the Parties fail to agree upon the appointment of the sole member of the Dispute Board by the date stated in the first paragraph of GCC Subclause 45.1;

(b) either Party fails to nominate a member (for approval by the other Party) of a Dispute Board of three persons by such date;

(c) the Parties fail to agree upon the appointment of the third member (to act as chairman) of the Dispute Board by such date; or

(d) the Parties fail to agree upon the appointment of a replacement person within 42 days after the date on which the sole member or one of the three members declines to act or is unable to act as a result of death, disability, resignation, or termination of appointment;

then the appointing entity or official named in the SCC shall, upon the request of either or both of the Parties and after due consultation with both Parties, appoint this member of the Dispute Board. This appointment shall be final and conclusive. Each Party shall be responsible for paying one-half of the remuneration of the appointing

entity or official.

45.3 Obtaining Dispute Board's Decision

If a dispute (of any kind whatsoever) arises between the Parties in connection withthe performance of the Contract, including any dispute as to any certificate, determination, instruction, opinion or valuation of the Project Manager, either Party may refer the dispute in writing to the Dispute Board for its decision, with copies to the other Party and the Project Manager. Such reference shall state that it is given under this Subclause.

For a Dispute Board of three persons, the Dispute Board shall be deemed to have received such reference on the date when it is received by the chairman of the Dispute Board.

Both Parties shall promptly make available to the Dispute Board all such additional information, further access to the Site, and appropriate facilities, as the Dispute Board may require for the purposes of making a decision on such dispute. The Dispute Board shall be deemed to be not acting as arbitrator(s).

Within 84 days after receiving such reference, or within such other period as may be proposed by the Dispute Board and approved by both Parties, the Dispute Board shall give its decision, which shall be reasoned and shall state that it is given under this Subclause. The decision shall be binding on both Parties, who shall promptly give effect to it unless and until it shall be revised in an amicable settlement or an arbitral award as described below. Unless the Contract has already been abandoned, repudiated or terminated, the Contractor shall continue to proceed with the performance of the Facilities in accordance with the Contract.

If either Party is dissatisfied with the Dispute Board's decision, then either Party may, within 28 days after receiving the decision, give notice to the other Party of its dissatisfaction and intention to commence arbitration. If the Dispute Board fails to give its decision within the period of 84 days (or as otherwise approved) after receiving such reference, then either Party may, within 28 days after this period has expired, give notice to the other Party of its dissatisfaction and intention to commence arbitration.

In either event, this notice of dissatisfaction shall state that it is given under this Subclause, and shall set out the matter in dispute and the reason(s) for dissatisfaction. Except as stated in GCC Subclauses 45.6 and 45.7, neither Party shall be entitled to commence arbitration of a dispute unless a notice of dissatisfaction has been given in accordance with this Subclause.

If the Dispute Board has given its decision as to a matter in dispute to both Parties, and no notice of dissatisfaction has been given by either Party within 28 days after it received the Dispute Board's decision, then the decision shall become final and binding upon both Parties.

45.4 Amicable Settlement

Where notice of dissatisfaction has been given under GCC Subclause 45.3 above, bothParties shall attempt to settle the dispute amicably before the commencement of arbitration. However, unless both Parties agree otherwise, arbitration may be commenced on or after the fifty-sixth day after the day on which notice of dissatisfaction and intention

to commence arbitration was given, even if no attempt at amicable settlement has been made.

45.5 Arbitration

Unless settled amicably, any dispute in respect of which the Dispute Board's decision (if any) has not become final and binding shall be finally settled by international arbitration. Unless otherwise agreed by both Parties,

(a) arbitration proceedings shall be conducted as stated in the Special Conditions;

(b) if no arbitration proceedings is so stated, the dispute shall be finally settled by institutional arbitration under the Rules of Arbitration of the International Chamber of Commerce;

(c) the dispute shall be settled by three arbitrators; and

(d) the arbitration shall be conducted in the language for communications defined in GCC Subclause 5.3.

The arbitrator(s) shall have full power to open up, review and revise any certificate, determination, instruction, opinion or valuation of the Project Manager, and any decision of the Dispute Board, relevant to the dispute. Nothing shall disqualify the Project Manager from being called as a witness and giving evidence before the arbitrator(s) on any matter whatsoever relevant to the dispute.

Neither Party shall be limited in the proceedings before the arbitrator(s) to the evidence or arguments previously put before the Dispute Board to obtain its decision, or to the reasons for dissatisfaction given in its notice of dissatisfaction. Any decision of the Dispute Board shall be admissible in evidence in the arbitration.

Arbitration may be commenced prior to or after completion of the Works. The obligations of the Parties, the Project Manager and the Dispute Board shall not be altered by reason of any arbitration being conducted during the progress of the Works.

45.6 Failure to Comply with Dispute Board's Decision

In the event that a Party fails to comply with a Dispute Board decision which has become final and binding, then the other Party may, without prejudice to any other rights it may have, refer the failure itself to arbitration under GCC Subclause 45.5. GCC Subclauses 45.3 and 45.4 shall not apply to this reference.

45.7 Expiry of Dispute Board's Appointment

If a dispute arises between the Parties in connection with the performance of the Contract, and there is no Dispute Board in place, whether byreason of the expiry of the Dispute Board's appointment or otherwise,

(a) GCC Subclauses 45.3 and 45.4shall not apply, and

(b) the dispute may be referred directly to arbitration under GCC Subclause 45.5.

APPENDIXA

General Conditions of Dispute Board Agreement

1 Definitions

Each “Dispute Board Agreement” is a tripartite agreement by and between

(a) the “Employer”;

(b) the “Contractor”; and

(c) the “Member” who is defined in the Dispute Board Agreement as being

(i) the sole member of the "Dispute Board" and, where this is the case, all references to the “Other Members” do not apply; or

(ii) one of the three persons who are jointly called the “Dispute Board”(or “dispute board”) and, where this is the case, the other two persons are called the “Other Members”.

The Employer and the Contractor have entered (or intend to enter) into a contract, which is called the "Contract" and is defined in the Dispute Board Agreement, which incorporates this Appendix. In the Dispute Board Agreement, words and expressions which are not otherwise defined shall have the meanings assigned to them in the Contract.

2 General Provisions

Unless otherwise stated in the Dispute Board Agreement, it shall take effect on the latest of the following dates:

(a) the Commencement Date defined in the Contract;

(b) when the Employer, the Contractor and the Member have each signed the Dispute Board Agreement; or

(c) when the Employer, the Contractor and each of the Other Members (if any) have respectively each signed a dispute board agreement.

This employment of the Member is a personal appointment. At any time, the Member may give not less than 70 days’ notice of resignation to the Employer and to the Contractor, and the Dispute Board Agreement shall terminate upon the expiry of this period.

3 Warranties

The Member warrants and agrees that he/she is and shall be impartial and independent of the Employer, the Contractor and the Project Manager. The Member shall promptly disclose, to each of them and to the Other Members (if any), any fact or circumstance which might appear inconsistent with his/her warranty and agreement of impartiality and independence.

When appointing the Member, the Employer and the Contractor relied upon the Member’s representations that he/she is

(a) experienced in the work, which the Contractor is to carry out under the Contract,

(b) experienced in the interpretation of contract documentation, and

(c) fluent in the language for communications defined in the Contract.

4 General Obligations of the Member

The Member shall

(a) have no interest financial or otherwise in the Employer, the Contractor or the Project Manager, nor any financial interest in the Contract except for payment under the Dispute Board Agreement;

(b) not previously have been employed as a consultant or otherwise by the Employer, the Contractor, or the Project Manager, except in such circumstances as were disclosed in writing to the Employer and the Contractor before they signed the Dispute Board Agreement;

(c) have disclosed in writing to the Employer, the Contractor, and the Other Members (if any), before entering into the Dispute Board Agreement and to his/her best knowledge and recollection, any professional or personal relationships with any director, officer, or employee of the Employer, the Contractor, or the Project Manager, and any previous involvement in the overall project of which the Contract forms part;

(d) not, for the duration of the Dispute Board Agreement, be employed as a consultant or otherwise by the Employer, the Contractor, or the Project Manager, except as may be agreed in writing by the Employer, the Contractor, and the Other Members (if any);

(e) comply with the annexed procedural rules and with GCC Subclause 45.3;

(f) not give advice to the Employer, the Contractor, the Employer's Personnel, or the Contractor's Personnel concerning the conduct of the Contract, other than in accordance with the annexed procedural rules;

(g) not while a Member enter into discussions or make any agreement with the Employer, the Contractor, or the Project Manager regarding employment by any of them, whether as a consultant or otherwise, after ceasing to act under the Dispute Board Agreement;

(h) ensure his/her availability for all site visits and hearings as are necessary;

(i) become conversant with the Contract and with the progress of the Facilities (and of any other parts of the project of which the Contract forms part) by studying all documents received, which shall be maintained in a current working file;

(j) treat the details of the Contract and all the Dispute Board's activities and hearings as private and confidential, and not publish or disclose them without the prior written consent of the Employer, the Contractor, and the Other Members (if any); and

(k) be available to give advice and opinions on any matter relevant to the Contract when requested by both the Employer and the Contractor, subject to the agreement of the Other Members (if any).

5 General Obligations of the Employer and the Contractor

The Employer, the Contractor, the Employer's Personnel and the Contractor's Personnel shall not request advice from or consultation with the Member regarding the Contract, otherwise than in the normal course of the Dispute Board's activities under the Contract and the Dispute Board Agreement. The Employer and the Contractor shall be responsible for compliance with this provision, by the Employer's Personnel and the Contractor's Personnel respectively.

The Employer and the Contractor undertake to each other and to the Member that the Member shall not, except as otherwise agreed in writing by the Employer, the Contractor, the Member and the Other Members (if any)

(a) be appointed as an arbitrator in any arbitration under the Contract;

(b) be called as a witness to give evidence concerning any dispute before arbitrator(s) appointed for any arbitration under the Contract; or

(c) be liable for any claims for anything done or omitted in the discharge or purported discharge of the Member's functions, unless the act or omission is shown to have been in bad faith.

The Employer and the Contractor hereby jointly and severally indemnify and hold the Member harmless against and from claims from which he is relieved from liability under the preceding paragraph.

Whenever the Employer or the Contractor refers a dispute to the Dispute Board under GCC Subclause 45.3, which will require the Member to make a site visit and attend a hearing, the Employer or the Contractor shall provide appropriate security for a sum equivalent to the reasonable expenses to be incurred by the Member. No account shall be taken of any other payments due or paid to the Member.

6 Payment

The Member shall be paid as follows, in the currency named in the Dispute Board Agreement:

(a) a retainer fee per calendar month, which shall be considered as payment in full for

(i) being available on 28 days' notice for all site visits and hearings;

(ii) becoming and remaining conversant with all project developments and maintaining relevant files;

(iii) all office and overhead expenses including secretarial services, photocopying and office supplies incurred in connection with his duties; and

(iv) all services performed hereunder except those referred to in sub-paragraphs (b) and (c) of this Clause.

The retainer fee shall be paid with effect from the last day of the calendar month in which the Dispute Board Agreement becomes effective; until the last day of the calendar month in which the Taking-Over Certificate is issued for the whole of the Works.

With effect from the first day of the calendar month following the month in which Taking-Over Certificate is issued for the whole of the Works, the retainer fee shall be reduced by one-third. This reduced fee shall be paid until the first day of the calendar month in which the Member resigns or the Dispute Board Agreement is otherwise terminated.

(b) a daily fee, which shall be considered as payment in full for

(i) each day or part of a day up to a maximum of 2 days' travel time in each direction for the journey between the Member's home and the site, or another location of a meeting with the Other Members (if any);

(ii) each working day on site visits, hearings, or preparing decisions; and

(iii) each day spent reading submissions in preparation for a hearing.

(c) all reasonable expenses, including necessary travel expenses (air fare in less than first class, hotel and subsistence and other direct travel expenses) incurred in connection with the Member's duties, as well as the cost of telephone calls, courier charges, facsimiles, and telexes, and use of the internet: a receipt shall be required for each item in excess of 5%of the daily fee referred to in sub-paragraph (b) of this Clause;

(d) any taxes properly levied in the Country on payments made to the Member (unless a national or permanent resident of the Country) under this Clause 6.

The retainer and daily fees shall be as specified in the Dispute Board Agreement. Unless it specifies otherwise, these fees shall remain fixed for the first 24 calendar months, and shall thereafter be adjusted by agreement between the Employer, the Contractor and the Member, at each anniversary of the date on which the Dispute Board Agreement became effective.

If the parties fail to agree on the retainer fee or the daily fee, the appointing entity or official named in the SCC shall determine the amount of the fees to be used.

The Member shall submit invoices for payment of the monthly retainer and air fares quarterly in advance. Invoices for other expenses and for daily fees shall be submitted following the conclusion of a site visit or hearing. All invoices shall be accompanied by a brief description of activities performed during the relevant period and shall be addressed to the Contractor.

The Contractor shall pay each of the Member's invoices in full within 56 calendar days after receiving each invoice and shall apply to the Employer (in the Statements under the Contract) for reimbursement of one-half of the amounts of these invoices. The Employer shall then pay the Contractor in accordance with the Contract.

If the Contractor fails to pay to the Member the amount to which he/she is entitled under the Dispute Board Agreement, the Employer shall pay the amount due to the Member and any other amount which may be required to maintain the operation of the Dispute Board; and without prejudice to the Employer's rights or remedies. In addition to all other rights arising from this default, the Employer shall be entitled to reimbursement of all sums paid in excess of one-half of these payments, plus all costs of recovering these sums and financing charges calculated at the rate specified in accordance with GCC Subclause 12.3.

If the Member does not receive payment of the amount due within 70 days after submitting a valid invoice, the Member may (i) suspend his/her services (without notice) until the payment is received, and/or (ii) resign his/her appointment by giving notice under Clause 7.

7 Termination

At any time: (i) the Employer and the Contractor may jointly terminate the Dispute Board Agreement by giving 42 days' notice to the Member, or (ii) the Member may resign as provided for in Clause 2.

If the Member fails to comply with the Dispute Board Agreement, the Employer and the Contractor may, without prejudice to their other rights, terminate it by notice to the Member. The notice shall take effect when received by the Member.

If the Employer or the Contractor fails to comply with the Dispute Board Agreement, the Member may, without prejudice to his other rights, terminate it by notice to the Employer and the Contractor. The notice shall take effect when received by them both.

Any such notice, resignation and termination shall be final and binding on the Employer, the Contractor and the Member. However, a notice by the Employer or the Contractor, but not by both, shall be of no effect.

8 Default of the Member

If the Member fails to comply with any of his obligations under Clause 4 concerning his impartiality or independence in relation to the Employer or the Contractor, he/she shall not be entitled to any fees or expenses hereunder and shall, without prejudice to their other rights, reimburse each of the Employer and the Contractor for any fees and expenses received by the Member and the Other Members (if any), for proceedings or decisions (if any) of the Dispute Board which are rendered void or ineffective by the said failure to comply.

9 Disputes

Any dispute or claim arising out of or in connection with this Dispute Board Agreement, or the breach, termination or invalidity thereof, shall be finally settled by institutional arbitration. If no other arbitration institute is agreed, the arbitration shall be conducted under the Rules of Arbitration of the International Chamber of Commerce by one arbitrator appointed in accordance with these Rules of Arbitration.

Annex - DISPUTE BOARD GUIDELINES

1. Unless otherwise agreed by the Employer and the Contractor, the Dispute Board shall visit the site at intervals of not more than 140 days, including times of critical construction events, at the request of either the Employer or the Contractor. Unless otherwise agreed by the Employer, the Contractor, and the Dispute Board, the period between consecutive visits shall not be less than 70 days, except as required to convene a hearing as described below.

2. The timing of and agenda for each site visit shall be as agreed jointly by the Dispute Board, the Employer, and the Contractor, or in the absence of agreement, shall be decided by the Dispute Board. The purpose of site visits is to enable the Dispute Board to become and remain acquainted with the progress of the Works and of any actual or potential problems or claims, and, as far as reasonable, to prevent potential problems or claims from becoming disputes.

3. Site visits shall be attended by the Employer, the Contractor, and the Project Manager and shall be coordinated by the Employer in cooperation with the Contractor. The Employer shall ensure the provision of appropriate conference facilities and secretarial and copying services. At the conclusion of each site visit and before leaving the site, the Dispute Board shall prepare a report on its activities during the visit and shall send copies to the Employer and the Contractor.

4. The Employer and the Contractor shall furnish to the Dispute Board one copy of all documents which the Dispute Board may request, including Contract documents, progress reports, variation instructions, certificates, and other documents pertinent to the performance of the Contract. All communications between the Dispute Board and the Employer or the Contractor shall be copied to the other Party. If the Dispute Board comprises three persons, the Employer and the Contractor shall send copies of these requested documents and these communications to each of these persons.

5. If any dispute is referred to the Dispute Board in accordance with GCC Subclause 45.3, the Dispute Board shall proceed in accordance with GCC Subclause 45.3 and these Guidelines. Subject to the time allowed to give notice of a decision and other relevant factors, the Dispute Board shall

   (a) act fairly and impartially as between the Employer and the Contractor, giving each of them a reasonable opportunity of putting his case and responding to the other's case; and

   (b) adopt procedures suitable to the dispute, avoiding unnecessary delay or expense.

6. The Dispute Board may conduct a hearing on the dispute, in which event it will decide on the date and place for the hearing and may request that written documentation and arguments from the Employer and the Contractor be presented to it prior to or at the hearing.

7. Except as otherwise agreed in writing by the Employer and the Contractor, the Dispute Board shall have power to adopt an inquisitorial procedure, to refuse admission to hearings or audience at hearings to any persons other than representatives of the Employer, the Contractor, and the Project Manager, and to proceed in the absence of any party who the Dispute Board is satisfied received notice of the hearing; but shall have discretion to decide whether and to what extent this power may be exercised.

8. The Employer and the Contractor empower the Dispute Board, among other things, to

   (a) establish the procedure to be applied in deciding a dispute;

(b) decide upon the Dispute Board's own jurisdiction, and as to the scope of any dispute referred to it;

(c) conduct any hearing as it thinks fit, not being bound by any rules or procedures other than those contained in the Contract and these Guidelines;

(d) take the initiative in ascertaining the facts and matters required for a decision;

(e) make use of its own specialist knowledge, if any;

(f) decide upon the payment of financing charges in accordance with the Contract;

(g) decide upon any provisional relief such as interim or conservatory measures;

(h) open up, review and revise any certificate, decision, determination, instruction, opinion or valuation of the Project Manager, relevant to the dispute; and

(i) appoint, should the Dispute Board so consider necessary and the Parties agree, a suitable expert at the cost of the Parties to give advice on a specific matter relevant to the dispute.

9. The Dispute Board shall not express any opinions during any hearing concerning the merits of any arguments advanced by the Parties. Thereafter, the Dispute Board shall make and give its decision in accordance with GCC Subclause 45.3, or as otherwise agreed by the Employer and the Contractor in writing. If the Dispute Board comprises three persons

(a) it shall convene in private after a hearing, in order to have discussions and prepare its decision;

(b) it shall endeavour to reach a unanimous decision: if this proves impossible the applicable decision shall be made by a majority of the Members, who may require the minority Member to prepare a written report for submission to the Employer and the Contractor; and

(c) if a Member fails to attend a meeting or hearing, or to fulfil any required function, the other two Members may nevertheless proceed to make a decision, unless

(i) either the Employer or the Contractor does not agree that they do so, or

(ii) the absent Member is the chairman and he/she instructs the other Members to not make a decision.

Section 8: Special Conditions of Contract

The following Special Conditions of Contract (SCC) shall supplement the General Conditions of Contract (GCC). Whenever there is a conflict, the provisions herein shall prevail over those in the GCC. The clause number of the SCC is the corresponding clause number of the GCC.

Table of Clauses

1. Definitions 2
5. Law and Language 2
7. Scope of Facilities 2
8. Time for Commencement and Completion 2
9. Contractor's Responsibilities 3
10. Employer's Responsibilities 3
11. Contract Price 4
13. Securities 4
14. Taxes and Duties 4
18. Work Program 5
19. Subcontracting 5
21. Procurement 5
22. Installation 6
23. Test and Inspection 8
24. Completion of the Facilities 8
25. Commissioning and Operational Acceptance 8
26. Completion Time Guarantee 9
27. Defect Liability 9
30. Limitation of Liability 10
35. Unforeseen Conditions 10
45. Disputes and Arbitration 10
46. Eligibility 10
47. Compliance with Environmental laws and regulations 11

1. Definitions

The Employer is **: Bangladesh Rural Electrification Board** (BREB)

The Project Manager is: Project Director

Solar Photovoltaic Pumping for Agricultural Irrigation Project,

Training Academy Building (6th floor)

Bangladesh Rural Electrification Board (BREB)

Nikunja-2, Khilkhet

The Bank is: **Asian Development Bank (ADB)**

Country of Origin: **All countries as indicated in Section 5 of the bidding documents, Eligible Countries.**

5. Law and Language

5.1 The Contract shall be interpreted in accordance with the laws of: The Peoples' Republic of Bangladesh.

5.2 The ruling language is: English

5.3 The language for communications is: English

7. Scope of Facilities

7.3 The Contractor agrees to supply spare parts for a period of years: 5 (five) years

The Contractor shall carry sufficient inventories of Pump inverter, solar PV Module, Pump, motor and other relevant accessories like circuit boards, circuit breakers, fuses, cables, sensors, pipes, conduits, nut-bolts, connectors, SPDs, valves, switches etc. to ensure repair or replacement works within 24 hours during 5 years defect liability period. In addition, in the event of termination of the production of spare parts, advance notification will be made to the Employer of the pending termination, with sufficient time to permit the Employer to procure the needed requirement if necessary. Following such termination, the Contractor will furnish to the extent possible and at no cost to the Employer the blueprints, drawings and specifications of the spare parts, if requested.

8. Time for Commencement and Completion

8.1 The Contractor shall commence work on the Facilities within 14 (fourteen) days from the Effective Date for determining Time for Completion as specified in the Contract Agreement.

8.2 The Time for Completion of the whole of the Facilities shall be10 months from the Effective Date as described in the Contract Agreement.

Time for Completion for parts of the Facilities: Each Solar Irrigation System shall be completed in accordance with agreed schedule of completion.

9. Contractor's Responsibilities

9.1 The following shall be added:

The Contractor shall supply all sort of raw materials, utilities, accessories, tools,, facilities, services and other matters in an amount sufficient to carry out the Pre-commissioning, Commissioning and Guarantee Tests as prescribed and required in the Scope of Works under the Contract.

The contractor shall implement Environmental and Social Review Framework (ESRF) and environmental management plan (EMP).

9.3 The following paragraphs shall be added:

The Contractor shall also acquire and pay for all permits, approvals and/or licenses from all private, local, state or national government authorities or public service (land development, access road for transportation of goods, drilling boreholes, any other permit required for construction works of the pumping systems) undertakings in the country where the Site is located which (a) such authorities or undertakings require the Employer to obtain in the Employer's name, (b) are necessary for the execution of the Contract, and (c) are specified in the Appendix (Scope of Works and Supply by the Employer).

The cost of acquiring such permits, approvals and/or licenses shall be deemed to be included in the Contract Price.

9.10 A GC Sub-clause 9.10 shall be added as follows:

"The Contractor shall, without any additional cost to the Employer, provide all the engineering data, drawing and descriptive materials submitted with the bid, in five (5) copies to form a part of the Contract immediately after Notification of Award."

9.11 A GC Sub-clause 9.11 shall be added as follows:

"The Contractor shall, at its own expense, provide the Employer with five (5) true copies of Contract Document within fifteen (15) days after signing of the Contract."

10. Employer's Responsibilities

10.3 Replace GC Sub-clause10.3 with the following:

The Employer shall give administrative support to the Contractor to acquire all permits, approvals and/or licenses from local, state or national government authorities or public service undertakings in the country where the Site is located.

10.5 Replace GC Sub-clause 10.5 with the following:

The Employer shall provide sufficient and qualified personnel for Pre-commissioning, Commissioning and Guarantee Tests. The Employer or its representative shall witness the Commissioning and Guarantee Tests in accordance with the terms and conditions of the Contract and certify accordingly.

11. Contract Price

11.2 The Contract Price shall not be adjusted. Payment will be made on the actual quantity of Plant and Installation Services that will be completed by the Contractor during the Contract Execution Stage.

13. Securities

13.3.1 The amount of performance security, as a percentage of the Contract Price for the Facility or for the part of the Facility for which a separate Time for Completion is provided, shall be: **10% of contract price**.

13.3.2 The Performance Security amount shall be in the form of an unconditional bank guarantee issued by a schedule bank of Bangladesh or any internationally recognized foreign bank located outside the Purchaser's Country as per the form included in Section 9 (Contract Forms), denominated in the types and proportions of the currencies in which the Contract Price is payable, or in a freely convertible currency acceptable to the Employer.

In case the institution issuing the security is located outside the country of Bangladesh, it shall have a correspondent financial institution located in the territory of Bangladesh to make it enforceable.

The performance security must not be perforated, torn, sealed or signed by any party other than issuing bank.

13.3.3 The performance security shall not be reduced on the date of the Operational Acceptance.

14. Taxes and Duties

14.1 Add two new paragraphs:

"The Employer is responsible for deducting value added tax (VAT) and advance income tax (AIT) at source at the rate applicable in accordance with the government rules of Bangladesh at the time of making any payment to the Contractor."

Bidders may acquire information regarding taxes and duties from the National Board of Revenue (NBR) of Bangladesh.

14.2 Add two new paragraphs:

The Employer shall not be responsible for the payment of customs duties, VAT and taxes for the items imported for civil works or any other purpose specified in Price Schedule No. 4.

The Employer shall not be liable to pay customs duties, value added taxes and charges levied on food of any kind or personal effects imported for consumption or use by the personnel of the Contractor or its Subcontractors.

14.5 Add new Sub-clause:

"The Contractor shall be liable to the Employer for customs duties and taxes, paid by the Employer for the plant and equipment specified in Price Schedule No. 1 if such plant and equipment are sold in Bangladesh without the consent of the Employer or returned without incorporating in the Site or permanent installation. The Employer shall deduct such amount of customs duties, VAT and taxes paid by the Employer to the government of Bangladesh, from the final bill of the

Contractor."

The Contractor shall be responsible for incremental or full payment of customs duties, VAT and taxes for the replaced plants and equipment specified in Price Schedule No. 1 for which the Employer has already paid customs duties, VAT and taxes to the relevant governmental authority.

18. Work Program

18.2 The following paragraph is added after the 1st paragraph:

The detail program of contract performance shall be either in MS Project, or other suitable program. If the contract performance program is provided other than the MS Project, the Contractor shall also provide the software to the Employer for using the specified program.

18.3 The following is added at the end of second paragraph.

(c) monitoring of the obligations in Sub-Clauses 9.9, 21.1, 22.1.1, 22.2.3 (d), 22.2.7(d),22.2.15, 22.2.16 and 47.

19. Subcontracting

19.1 Add the following:

The Contractor shall not subcontract the whole of the Facilities.

21. Procurement

21.1 The following is added at the end.

The Contractor shall adequately record the condition of roads, agricultural land and other infrastructure prior to the start of transporting materials, and construction

21.4 Customs Clearance

The following paragraphs shall be added at the end of the existing paragraph as follows:

"In order to obtain the necessary import permits and satisfy the requirements of the customs authorities the following documentation is required:

Within 30 days of the signing of the Contract, the Contractor shall submit a detailed delivery schedule of Plant under the Contract indicating the type of equipment and the name of the manufacturer. Six (6) copies of the schedule are to be submitted to the Employer.

On behalf of the Government of Bangladesh the Ministry of Commerce annually issue a schedule of import protected items. The Contractor shall be responsible for advising the Engineer of any plant it intends to ship under the Contract which is import protected. This advice is to be received by the Engineer at least two month before the plant reaches Bangladesh in order to permit the Employer to obtain the necessary import permissions.

On shipment of plant the following distribution of shipping documents are required as follows:

(i) To the Project Director, PMU, SPPAI Project, Training Academy Building (6th floor), Bangladesh Rural Electrification Board (BREB), Nikunja-2, Khilkhet, Dhaka-1229, Bangladesh.

1 original plus 10 copy Invoices Endorsed by the Contractor

1 negotiable plus 10 copies of Bill of Lading Endorsed by the Contractor

1 original plus 10 copy Insurance Certificate

10 copies of packing lists

10 copies of Freight Memo

1 original plus 10 copies of Certificate of Origin

10 copies of insurance invoice

10 copies of Application for Payment

10 copies of Pre shipment Inspection Certificate or Waiver thereof

22. Installation

22.1.1 Bench Mark

Add the following at the end of Sub-Clause 22.1.1 (end of sub-paragraph a)

The Contractor shall comply with the measures and requirements relevant to the Contractor which are set forth in the Environmental and Social Review Framework (ESRF) and Environmental Management Plan (EMP) attached hereto as Appendix A, to the extent it concerns impacts on affected people during construction; and any corrective or preventive actions set out in safeguards monitoring reports that the Employer will prepare from time to time to monitor implementation of the resettlement plan.

The Contractor shall allocate a budget for compliance with these measures, requirements and actions.

22.2 Labor

22.2.3 Add the following at the end of Sub-Clause 22.2.3 (c)

22.2.3 (d) The Contractor shall not make employment decisions based upon personal characteristics unrelated to job requirements. The Contractor shall base the employment relationship upon equal opportunity and fair treatment, and shall not discriminate with respect to aspects of the employment relationship, including recruitment and hiring, compensation (including wages and benefits), working conditions and terms of employment or retirement, and discipline.

The Contractor shall provide equal wages and benefits to men and women for work of equal value or type.

22.2.5 Working Hours

Normal working hours are from 9:00am to 5:00pm (8 hours per day from Sunday to Thursday inclusive).

22.2.7 Health and Safety

(d) The Contractor shall throughout the contract (including the Defect Liability Period):

(i) conduct Information, Education and Consultation Communication (IEC) campaigns, at least every other month, addressed to all the Site staff and labor (including all the Contractor's employees, all Subcontractors and Employer's and Project Manager's employees, and all truck drivers and crew making deliveries to Site for construction activities) and to the immediate local communities, concerning the risks, dangers and impact, and appropriate avoidance behavior with respect to of Sexually Transmitted Diseases (STD)—or Sexually Transmitted Infections (STI) in general and HIV/AIDS in particular;

(ii) provide male or female condoms for all Site staff and labor as appropriate; and

(iii) provide for STI and HIV/AIDS screening, diagnosis, counseling and referral to a dedicated national STI and HIV/AIDS program, (unless otherwise agreed) of all Site staff and labor.

(iv) The Contractor shall include in the program to be submitted for the execution of the Facilities under Subclause 18.2 an alleviation program for Site staff and labor and their families in respect of STI and STD including HIV/AIDS. The STI, STD and HIV/AIDS alleviation program shall indicate when, how and at what cost the Contractor plans to satisfy the requirements of this Subclause and the related specification. For each component, the program shall detail the resources to be provided or utilized and any related subcontracting proposed. The program shall also include provision of a detailed cost estimate with supporting documentation. Payment to the Contractor for the preparation and implementation this program shall not exceed the amount dedicated for this purpose.

(v) The Contractor shall conduct health and safety programs for workers employed under the project, and shall include information on the trafficking of women and the risk of sexually transmitted diseases, including HIV/AIDs in such programs.

22.2.8 Funeral Arrangements

Funeral Arrangements: stated in this section. No other specific arrangements.

22.2.16 Prohibition of Harmful Child Labor

Add the following at the end of Sub-Clause 22.2.16.

'Child' means a child below the statutory minimum age specified under applicable national, provincial or local law of Bangladesh.

22.2.17 Respectful Work Environment

The Contractor shall ensure that its employees and Subcontractors observe the highest ethical standards and refrain from any form of bullying, discrimination, misconduct, and harassment, including sexual harassment and shall, at all times, behave in a manner that creates an environment free of unethical behavior, bullying, misconduct, and harassment, including sexual harassment. The Contractor shall take appropriate action against any employees or Subcontractors,

including suspension or termination of employment or subcontract, if any form of unethical or inappropriate behavior is identified.

The Contractor shall conduct training programs for its employees and Subcontractors to raise awareness on and prevent any form of bullying, discrimination, misconduct, and harassment including sexual harassment, and to promote a respectful work environment. The Contractor shall keep an up to date record of its employees and subcontractors who have attended and completed such training programs and provide such records to the Employer or the Engineer at their first written request.

23. Test and Inspection

23.2 The Employer and the Project Manager or their designated representatives (team of 2-3 persons) shall be entitled to attend the aforesaid test and/or inspection, provided that the contractor shall bear all costs and expenses incurred in connection with such attendance including, but not limited to, all traveling and board and lodging expenses according to the existing government rules and regulations.

23.3 The following sentence shall be added to at the end of the existing paragraph:

"A reasonable advance notice shall mean that the notice is delivered to the Project Manager at least four (4) weeks before such test and inspection."

24. Completion of the Facilities

24.2 The 2nd paragraph of GC Sub-clause 24.2 is deleted.

24.3 Replace GC Sub-clause 24.3 with the following:

As soon as reasonably practicable after the operating and maintenance personnel have been supplied by the Employer in accordance with GC Sub-Clause 24.2, the Contractor shall commence Pre-commissioning of the Facilities or the relevant part thereof in preparation for Commissioning, subject to GC Sub-Clause 25.

24.9 Upon the completion of construction, the Contractor shall fully reinstate pathways, other local infrastructure, and agricultural land to at least their pre-project condition as recorded by the Contractor in consonance with its obligation in Clause 21.1.

25. Commissioning and Operational Acceptance

25.1.2 Replace GC Sub-clause GC 25.1.2 with the following:

The Employer shall deploy the operating and maintenance personnel pursuant to GC Sub-clause 10.5 and the Contractor shall provide all materials and support services pursuant to GC Sub-clause 9.9 as required for Commissioning.

25.1.3 Add:

Immediately after the Commissioning, the Contractor shall so notify the Project Manager in writing.

25.2 The Guarantee Test in this clause and all other clauses in the conditions of contract shall mean the commissioning tests described in Section 6, Employer's Requirements.

25.2.2 The Guarantee Test of the Facilities shall be successfully completed within 21 (twenty) days from the date of Completion.

25.3.3 Replacing GC Sub-clause 25.3.3 with the following:

The Project Manager shall, after consultation with the Employer, and within twenty one (21) days after receipt of the Contractor's notice, issue an Operational Acceptance Certificate.

After the Operational Acceptance has been issued, the Contractor and the Employer shall remain liable for the fulfillment of any obligation which remains unperformed at that time. For the purposes of determining the nature and extent of any such obligation, the Contract shall be deemed to remain in force.

25.3.4 Replace “seven (7) days” with “twenty one (21) days”.

26. Completion Time Guarantee

26.2 Applicable rate for liquidated damages: 0.5% (Zero point five percent) of the Contract Price per week in the proportions of currencies in which the Contract Price is payable.

The above rate applies to the price of the part of the Facilities, as quoted in the Price Schedule, for that part for which the Contractor fails to achieve Completion within the particular Time for Completion.

Maximum deduction for liquidated damages: 10% (Ten percent) of the Contract Price.

26.3 No bonus will be given for earlier Completion of the Facilities or part thereof.

27. Defect Liability

27.2 Replace 1st para of GC Sub-clause 27.2 with:

The Defect Liability Period (DLP) for each solar PV pumping system shall be 5 (Five) years from the date of Operational Acceptance and shall be secured by a performance security whose validity shall be 5 years plus 28 days from the date of operational acceptance.

27.8 Replacing GC Sub-clause 27.8 with the following:

During the first two years of the defect liability period any fault arising due to manufacturing defect or poor installation, in any component must be resolved by replacing that component. In such event of any replacement consequent to any defect, during the first two years of defect liability period, the warranty period for that component only will recommence from the date of acceptance of replacement by the Employer.

27.9 Replace the “Completion of the Facilities” with “Operational Acceptance” in line 5.

27.10 During this Defect Liability Period, if the pumping system, fails to deliver water owing to a defect, the Contractor shall be responsible for remedying the defect within 24 hours of notice by the Employer. In case of failure to remedy the defect, the Employer may proceed to do such work, and the reasonable costs incurred by the Employer in connection therewith shall be recovered by the Employer in accordance with GCC 27.7.

30. Limitation of Liability

30.1 (b) The multiplier of the Contract Price is: 2 (Two).

35. Unforeseen Conditions

35.3 Add at the end of Sub-Clause 35.3

In addition to notice of any Unforeseeable physical conditions, the Contractor shall provide the Engineer with a written notice of any unanticipated environmental or resettlement risks or impacts that arise during construction, implementation or operation of the Plant or Permanent Works, which were not considered in the initial environmental examination, the environmental management plan or the resettlement plan attached hereto as Appendix A.

45. Disputes and Arbitration

45.1 The Dispute Board shall be appointed within 28 days after the Effective Date.

The Dispute Board shall be a Dispute Board of three members

List of potential Dispute Board members is: the specific members shall be decided in consultation with the Contractor after signing the Contract.

45.2 Appointment (if not agreed) to be made by: The President of the Institution of Engineers Bangladesh.

45.5 Rules of procedure for arbitration proceedings:

(a) Contracts with foreign contractors:

International arbitration shall be conducted in accordance with the rules of arbitration. If no rules have been specified, then the Rules of the Singapore International Arbitration Centre (SIAC) shall apply.

Arbitration shall be administered by International Chamber of Commerce Arbitration Rules. If no institution has been specified, then SIAC shall be the institution to administer the arbitration.

The place of arbitration shall be the place of the institution administering the arbitration.

(b) Contracts with contractors being nationals of the Employer's country:

Any dispute between the Employer and a Contractor who is a national of the Employer's country arising in connection with the present Contract shall be referred to adjudication or arbitration in accordance with the Arbitration Act of the purchaser's country.

46. Eligibility

46.1 The Contractor shall have the nationality of an ADB member country. The Contractor shall be deemed to have the nationality of a country if the Contractor is a citizen or is constituted, incorporated, or registered, and operates in conformity with the provisions of the laws of that country. This criterion shall also apply to the determination of the nationality of proposed subcontractors or suppliers for any part of the Contract including related services.

46.2 The materials, equipment and services to be supplied under the Contract shall have their origin in eligible source countries and all expenditures under the Contract will be limited to such materials, equipment, and services. At the Employer's request, the Contractor may be required to provide evidence of the origin of materials, equipment and services.

46.3 For purposes of SCC 46.2, "origin" means the place where the materials and equipment are mined, grown, produced or manufactured, and from which the services are provided. Materials and equipment are produced when, through manufacturing, processing, or substantial or major assembling of components, a commercially recognized product results that differs substantially in its basic characteristics or in purpose or utility from its components.

47. Compliance with Environmental laws and regulations

The Contractor shall comply with all applicable national, provincial, and local environmental laws and regulations.

The Contractor shall (a) establish an operational system for managing environmental impacts, (b) carry out all of the monitoring and mitigation measures set forth in the Initial Environmental Examination ("IEE") and Environmental Management Plan ("EMP") and (c) allocate the budget required to ensure that such measures are carried out. The Contractor shall submit semi-annual reports on the carrying out of such measures to the Employer.

More particularly, the Contractor shall comply with (i) the measures and requirements set forth in the initial environmental examination and the environmental management plan attached hereto as Appendix A; and (ii) any corrective or preventative actions set out in safeguards monitoring reports that the Employer will prepare from time to time to monitor implementation of the initial environmental examination and the environmental management plan.

The Contractor shall allocate a budget for compliance with these measures, requirements and actions.

Section 9: Contract Forms

Table of Forms

Notice of Intention for Award of Contract 9-2

Notification of Award 9-3

Contract Agreement 9-4

Appendix 1:Terms and Procedures of Payment 9-7
Appendix 2: Price Adjustment 9-10
Appendix 3: Insurance Requirements 9-11
Appendix 4: Time Schedule 9-14
Appendix 5: List of Major Items of Plant and Services and List of Approved Subcontractors 9-15
Appendix 6: Scope of Works and Supply by the Employer 9-16
Appendix 7: List of Documents for Approval or Review 9-17
Appendix 8: Functional Guarantees 9-18

Performance Security 9-20

Advance Payment Security 9-21

Notice of Intention for Award of Contract

[*on letterhead paper of the Employer*]

[*date of notification*]

To: [*name of the Bidder*]
Attention: [*insert name of the Bidder's authorized representative*]
Address: [*insert address of the Bidder's authorized representative*]
Telephone/Fax numbers: [*insert telephone/fax numbers of the Bidder's authorized representative*]
E-mail Address: [*insert e-mail address of the Bidder's authorized representative*]

This is to notify you of our intention to award the contract [*insert name of the contract and identification number, as given in the Bid Data Sheet*]. You have [*insert number of days as specified in ITB 42.1 of the BDS*] days, from the date of this notification to (i) request for a debriefing in relation to the evaluation of your Bid, and/or (ii) submit a bidding-related complaint in relation to the intention for award of contract, in accordance with the procedures specified in ITB 47.1.

The summary of the evaluation are as follows:

1. List of Bidders

Name of Bidder	Bid Price as Read Out at Opening	Evaluated Bid Price

2. Reason/s Why Your Bid Was Unsuccessful

……
……
……

3. The Successful Bidder

Name of Bidder:	
Address:	
Contract Price:	
Duration of Contract:	
Scope of the Contract Awarded:	
Amount Performance Security Required:	

Authorized Signature: ……

Name and Title of Signatory: ……

Name of Agency: ……

Notification of Award

[*Employer's letterhead*]

Letter of Acceptance

[*date*]

To: [*Name and address of the contractor*]

This is to notify you that your Bid dated [*date*] for execution of the [*name of the contract and identification number, as given in the Bid Data Sheet*] for the Contract Price in the aggregate of [*amounts in words and figures*] [*name of currency*], as corrected and modified in accordance with the Instructions to Bidders is hereby accepted by our Agency.

You are requested to furnish the Performance Security within 28 days in accordance with the Conditions of Contract and any additional security required as a result of the evaluation of your bid, using for that purpose one of the Performance Security Forms included in Section 9 (Contract Forms) of the Bidding Document.

Authorized Signature:

Name and Title of Signatory:

Name of Agency:

Attachment: Contract Agreement

Contract Agreement

THIS AGREEMENT made on the [*insert number*] day of [*insert month*], [*insert year*],

BETWEEN

(1) [*name of the employer*], a corporation incorporated under the laws of [*country of the Employer*] and having its principal place of business at [*address of the Employer*] (hereinafter called "the Employer"), and (2) [*name of the contractor*], a corporation incorporated under the laws of [*country of the contractor*] and having its principal place of business at [*address of the contractor*] (hereinafter called "the Contractor").

WHEREAS the Employer desires to engage the Contractor to design, manufacture, test, deliver, install, complete and commission certain Facilities, viz. [*list of facilities*] ("the Facilities") and the Contractor have agreed to such engagement upon and subject to the terms and conditions hereinafter appearing.

NOW IT IS HEREBY AGREED as follows:

Article 1 Contract Documents

1.1 **Contract Documents** (Reference GCC Clause 2)
The following documents shall constitute the Contract between the Employer and the Contractor, and each shall be read and construed as an integral part of the Contract:

(a) This Contract Agreement and the Appendixes hereto
(b) Letter of Bid and Price Schedules submitted by the Contractor
(c) Special Conditions of Contract
(d) List of Eligible Countries that was specified in Section 5 of the Bidding Document
(e) General Conditions of Contract
(f) Specifications
(g) Drawings
(h) Other completed Bidding Forms submitted with the Letter of Bid
(i) Any other documents forming part of the Employer's Requirements
(j) Any other documents shall be added here[1]

1.2 **Order of Precedence** (Reference GCC Clause 2)
In the event of any ambiguity or conflict between the Contract Documents listed above, the order of precedence shall be the order in which the Contract Documents are listed in Article 1.1 (Contract Documents) above.

1.3 **Definitions** (Reference GCC Clause 1)
Capitalized words and phrases used herein shall have the same meanings as are ascribed to them in the General Conditions.

[1]Tables of Adjustment Data may be added if the contract provides for Price adjustment (see GCC 11).

Article 2
Contract Price and Terms of Payment

2.1 **Contract Price** (Reference GCC Clause 11)
The Employer hereby agrees to pay to the Contractor the Contract Price in consideration of the performance by the Contractor of its obligations hereunder. The Contract Price shall be the aggregate of [*amounts of foreign currency in words*], [*amounts in figures*] as specified in Price Schedule No. 5 (Grand Summary), [*amounts of local currency in words*], [*amounts in figures*], or such other sums as may be determined in accordance with the terms and conditions of the Contract.

2.2 **Terms of Payment** (Reference GCC Clause 12)
The terms and procedures of payment according to which the Employer will reimburse the Contractor are given in the Appendix (Terms and Procedures of Payment) hereto.

The Employer shall instruct its bank to issue an irrevocable confirmed documentary credit made available to the Contractor in a bank in the country of the Contractor. The credit shall be for an amount of [*amount equal to the total named in Schedule 1 less the advance payment to be made for plant and mandatory spare parts supplied from abroad*]; and shall be subject to the Uniform Customs and Practice for Documentary Credits 1993 Revision, ICC Publication No. 500.[2]

In the event that the amount payable under Schedule No. 1 is adjusted in accordance with GCC 11.2 or with any of the other terms of the Contract, the Employer shall arrange for the documentary credit to be amended accordingly

Article 3
Effective Date

3.1 **Effective Date** (Reference GCC Clause 1)
The Effective Date upon which the period until the Time for Completion of the Facilities shall be counted from is the date when all of the following conditions have been fulfilled:

(a) This Contract Agreement has been duly executed for and on behalf of the Employer and the Contractor.

(b) The Contractor has submitted to the Employer the performance security and the advance payment guarantee.

(c) The Employer has paid the Contractor the advance payment.

(d) The Contractor has been advised that the documentary credit referred to in Article 2.2 above has been issued in its favor.

Each party shall use its best efforts to fulfill the above conditions for which it is responsible as soon as practicable.

3.2 If the conditions listed under 3.1 are not fulfilled within 2 months from the date of this Contract notification because of reasons not attributable to the Contractor, the parties shall discuss and agree on an equitable adjustment to the Contract Price and the Time for Completion and/or other relevant conditions of the Contract.

[2] Or Uniform Customs and Practice for Documentary Credits 2007 Revision, ICC Publication No. 600 (or the latest version).

Article 4 Communications

4.1 The address of the Employer for notice purposes, pursuant to GCC 4.1 is: [*Employer's address*].

4.2 The address of the Contractor for notice purposes, pursuant to GCC 4.1 is: [*Contractor's address*].

Article 5. Appendixes

5.1 The Appendixes listed in the attached List of Appendixes shall be deemed to form an integral part of this Contract Agreement.

5.2 Reference in the Contract to any Appendix shall mean the Appendixes attached hereto, and the Contract shall be read and construed accordingly.

IN WITNESS WHEREOF the Employer and the Contractor have caused this Agreement to be duly executed by their duly authorized representatives the day and year first above written.

Signed by, for and on behalf of the Employer

[*Signature*]

[*Title*]

in the presence of

[*Signature*]

[*Title*]

Signed by, for and on behalf of the Contractor

[*Signature*]
[*Title*]

in the presence of

[*Signature*]
[*Title*]

APPENDIXES

Appendix 1: Terms and Procedures of Payment
Appendix 2: Price Adjustment
Appendix 3: Insurance Requirements
Appendix 4: Time Schedule
Appendix 5: List of Major Items of Plant and Services and List of Approved Subcontractors
Appendix 6: Scope of Works and Supply by the Employer
Appendix 7: List of Documents for Approval or Review
Appendix 8: Functional Guarantees

Appendix 1:Terms and Procedures of Payment

In accordance with the provisions of GCC Clause 12 (Terms of Payment), the Employer shall pay the Contractor in the following manner and at the following times, based on the Price Breakdown given in the section on Price Schedules. Payments will be made in the currencies quoted by the Bidder unless otherwise agreed between the parties. Applications for payment in respect of part deliveries may be made by the Contractor as work proceeds.

(A) Terms of Payment

Schedule No. 1 - Plant and Mandatory Spare Parts Supplied from Abroad
In respect of plant and mandatory spare parts supplied from abroad, the following payments shall be made:

Ten percent (10%) of the total CIP amount as an advance payment against receipt of invoice and an irrevocable advance payment security for the equivalent amount made out in favor of the Employer. The advance payment security may be reduced in proportion to the value of the plant and mandatory spare parts delivered to the site, as evidenced by delivery documents.

Eighty percent (80%) of the total or pro rata CIP or amount upon Incoterm “CIP,” upon delivery to the site within 60 days after receipt of invoice.

Five percent (5%) of the total or pro rata CIP or amount upon issue of the Completion Certificate, within 60 days after receipt of invoice.

Five percent (5%) of the total or pro rata CIP or amount upon issue of the Operational Acceptance Certificate, within 60 days after receipt of invoice.

Schedule No. 2 - Plant and Mandatory Spare Parts Supplied from Within the Employer’s Country
In respect of plant and mandatory spare parts supplied from within the Employer’s country, the following payments shall be made:

Ten percent (10%) of the total EXW amount as an advance payment against receipt of invoice, and an irrevocable advance payment security for the equivalent amount made out in favor of the Employer. The advance payment security may be reduced in proportion to the value of the plant and mandatory spare parts delivered to the site, as evidenced by delivery documents.

Eighty percent (80%) of the total or pro rata EXW amount upon Incoterm “Ex-Works,” upon delivery to the site within 60 days after receipt of invoice.

Five percent (5%) of the total or pro rata EXW amount upon issue of the Completion Certificate, within 60 days after receipt of invoice.

Five percent (5%) of the total or pro rata EXW amount upon issue of the Operational Acceptance Certificate, within 60 days after receipt of invoice.

Schedule No. 3 - Design Services
In respect of design services for both the foreign currency and the local currency portions, the following payments shall be made:

Ten percent (10%) of the total design services amount as an advance payment against receipt of invoice and an irrevocable advance payment security for the equivalent amount made out in favor of the Employer.

Ninety percent (90%) of the total or pro rata design services amount upon acceptance of design by the Project Manager within 60 days after receipt of invoice.

Schedule No. 4 - Installation and Other Services

In respect of installation services for both the foreign and local currency portions, the following payments shall be made:

Ten percent (10%) of the total installation and other services amount as an advance payment against receipt of invoice and an irrevocable advance payment security for the equivalent amount made out in favor of the Employer. The advance payment security may be reduced in proportion to the value of work performed by the Contractor as evidenced by the invoices for installation services.

Eighty percent (80%) of the measured value of work performed by the Contractor, as identified in the said Program of Performance, during the preceding month, as evidenced by the Employer's authorization of the Contractor's application, will be made monthly within 60 days after receipt of invoice.

Five percent (5%) of the total or pro rata value of installation services performed by the Contractor as evidenced by the Employer's authorization of the Contractor's monthly applications, upon issue of the Completion Certificate, within 60 days after receipt of invoice.

Five percent (5%) of the total or pro rata value of installation services performed by the Contractor as evidenced by the Employer's authorization of the Contractor's monthly applications, upon issue of the Operational Acceptance Certificate, within 60 days after receipt of invoice.

In the event that the Employer fails to make any payment on its respective due date, the Employer shall pay to the Contractor interest on the amount of such delayed payment at the rate of zero point zero one percent (0.01%) per day for period of delay until payment has been made in full.

(B) Payment Procedures

When applying for certification and making payments, the procedures shall be as follows:

The Contractor shall prepare Financial Statements as part of the Progress Reports.

The Project Manager shall, within 28 days after receiving a Financial Statement and supporting documents, issue to the Employer an Interim Payment Certificate, which shall state the amount which the Project Manager fairly determines to be due, with supporting particulars.

Payment of Interim Payment Certificates will be on monthly basis.

As per the legislative provision of the Country, Income Tax and Value Added Tax (IT / VAT) will be deducted from any Interim Payment Certificate before payment by the Employer to the Contractor.

The Employer shall advise the release of payment to the Contractor:

- The Advance Payment within 28 days after fulfillment of Article 2.3; and
- The Amount certified in each Interim Certificate within 56 days after the Project Manager receives the Statement and supporting documents.

Payment of the amount due in each currency shall be made into the bank account, nominated by the Contractor, in the payment country (for this currency).

Appendix 2: Price Adjustment

Not applicable as the price is fixed per Section 2.

Appendix 3:Insurance Requirements

(A) Types of Insurance to Be Taken Out by the Contractor

In accordance with the provisions of GCC Clause 34, the Contractor shall at its expense take out and maintain in effect, or cause to be taken out and maintained in effect, during the performance of the Contract, the types of insurance set forth below in the sums and with the deductibles and other conditions specified. The identity of the insurers and the form of the policies shall be subject to the approval of the Employer, such approval not to be unreasonably withheld.

(a) Cargo Insurance

Covering loss or damage occurring, while in transit from the supplier's or manufacturer's works or stores until arrival at the Site, to the Facilities (including spare parts therefore) and to the construction equipment to be provided by the Contractor or its Subcontractors.

Amount [in currency(ies)]	Deductible limits [in currency(ies)]	Parties insured [names]	From [place]	To [place]
110% of the CIF/ CIP (only imported items)	N/A	The Contractor and the Employer	Supplier	Site

(b) Installation All Risks Insurance

Covering physical loss or damage to the Facilities at the Site, occurring prior to completion of the Facilities, with an extended maintenance coverage for the Contractor's liability in respect of any loss or damage occurring during the defect liability period while the Contractor is on the Site for the purpose of performing its obligations during the defect liability period.

Amount [in currency(ies)]	Deductible limits [in currency(ies)]	Parties insured [names]	From [place]	To [place]
110% of the facility value	NA	The Contractor and the Employer	Commencement Date	Issue of Performance certificate

(c) Third Party Liability Insurance

Covering bodily injury or death suffered by third parties (including the Employer's personnel) and loss of or damage to property (including the Employer's property and any parts of the Facilities that have been accepted by the Employer) occurring in connection with the supply and installation of the Facilities.

Amount [in currency(ies)]	Deductible limits [in currency(ies)]	Parties insured [names]	From [place]	To [place]
$ 500,000 for any incident and in the aggregate of all incidents	NA	The Contractor, incl. Sub-contractor(-s) and the Employer.	Commencement Date	Issue of Performance certificate

(d) Automobile Liability Insurance
Covering use of all vehicles used by the Contractor or its Subcontractors (whether owned by them or not) in connection with the supply and installation of the Facilities. Comprehensive insurance in accordance with statutory requirements.

(e) Workers' Compensation
In accordance with the statutory requirements applicable in any country where the Facilities or any part thereof is executed.

(f) Employer's Liability
In accordance with the statutory requirements applicable in any country where the Facilities or any part thereof is executed.

(g) Other Insurance
The Contractor is also required to take out and maintain at its own cost the following types of insurance:

Details:

Amount [in currency(ies)]	Deductible limits [in currency(ies)]	Parties insured [names]	From [place]	To [place]
Value of the equipment	N/A	The Contractor incl. Sub-Contractor(-s) and the Employer	N/A	On-site

The Employer shall be named as co-insured under all insurance policies taken out by the Contractor pursuant to GCCSubclause 34.1, except for the Third Party Liability, Workers' Compensation, and Employer's Liability Insurance, and the Contractor's Subcontractors shall be named as co-insureds under all insurance policies taken out by the Contractor pursuant to GCCSubclause 34.1, except for the Cargo, Workers' Compensation and Employer's Liability Insurance. All insurer's rights of subrogation against such co-insureds for losses or claims arising out of the performance of the Contract shall be waived under such policies.

(B) Types of Insurance to Be Taken Out by the Employer

The Employer shall at its expense take out and maintain in effect during the performance of the Contract the following insurance policies.

Details:

Amount [in currency(ies)]	Deductible limits [in currency(ies)]	Parties insured [names]	From [place]	To [place]
N/A	N/A	N/A	N/A	N/A

Appendix 4: Time Schedule

Appendix 5: List of Major Items of Plant and Services and List of Approved Subcontractors

A list of major items of plant and services is provided below.

The following Subcontractors and Manufacturers are approved for carrying out the item of the facilities indicated. Where more than one Subcontractor is listed, the Contractor is free to choose between them, but it must notify the Employer of its choice in good time prior to appointing any selected Subcontractor. In accordance with GCCSubclause 19.1, the Contractor is free to submit proposals for Subcontractors for additional items from time to time. No Subcontracts shall be placed with any such Subcontractors for additional items until the Subcontractors have been approved in writing by the Employer and their names have been added to this list of Approved Subcontractors.

Major Items of Plant and Services	Approved Subcontractors and Manufacturers	Nationality

Appendix 6:Scope of Works and Supply by the Employer

The following personnel, facilities, works, and supplies will be provided or supplied by the Employer, and the provisions of GCC Clauses 10, 21, and 24 shall apply as appropriate.

All personnel, facilities, works, and supplies will be provided by the Employer in good time so as not to delay the performance of the Contractor, in accordance with the approved Time Schedule and Program of Performance pursuant to GCCSubclause 18.2.

Unless otherwise indicated, all personnel, facilities, works, and supplies will be provided free of charge to the Contractor.

Personnel	Charge to Contractor (if any)
The Employer will provide staff to participate in the training sessions during the Commissioning periods. The staff shall follow the Contractor's staff fulltime in the said periods and in the O&M period	N/A

Facilities	Charge to Contractor (if any)
N/A	N/A

Works	Charge to Contractor (if any)
N/A	N/A

Supplies	Charge to Contractor (if any)
N/A	N/A

Appendix 7: List of Documents for Approval or Review

Pursuant to GCCSubclause 20.3.1, the Contractor shall prepare, or cause its Subcontractor to prepare, and present to the Project Manager in accordance with the requirements of GCC Subclause 18.2 (Program of Performance), the following documents for

(A) Approval

1. .....

2. .....

3. .....

(B) Review

1. .....

2. .....

3. .....

Appendix 8: Functional Guarantees

1. General

This Appendix sets out

(a) the functional guarantees referred to in GCC Clause 28 (Functional Guarantees)

(b) the preconditions to the validity of the functional guarantees, either in production and/or consumption, set forth below

(c) the minimum level of the functional guarantees

(d) the formula for calculating liquidated damages for failure to attain the functional guarantees.

2. Preconditions

The Contractor gives the functional guarantees (specified herein) for the facilities, subject to the following preconditions being fully satisfied:

3. Functional Guarantees

Subject to compliance with the foregoing preconditions, the Contractor guarantees as follows:

3.1 Production Capacity

3.2 Raw Materials and Utilities Consumption

4. Failure in Guarantees and Liquidated Damages

4.1 Failure to Attain Guaranteed Production Capacity

If the production capacity of the facilities attained in the guarantee test, pursuant to GCCSubclause 25.2, is less than the guaranteed figure specified in para. 3.1 above, but the actual production capacity attained in the guarantee test is not less than the minimum level specified in para. 4.3 below, and the Contractor elects to pay liquidated damages to the Employer in lieu of making changes, modifications and/or additions to the Facilities, pursuant to GCCSubclause 28.3, then the Contractor shall pay liquidated damages at the rate of1.0% for every complete 1% of the deficiency in the production capacity of the Facilities, or at a proportionately reduced rate for any deficiency, or part thereof, of less than a complete 1%.

4.2 Raw Materials and Utilities Consumption in Excess of Guaranteed Level

If the actual measured figure of specified raw materials and utilities consumed per unit (or their average total cost of consumption) exceeds the guaranteed figure specified in para. 3.2 above (or their specified average total cost of consumption), but the actual consumption attained in the guarantee test, pursuant to GCCSubclause 25.2, is not more than the maximum level specified in para. 4.3 below, and the Contractor elects to pay liquidated damages to the Employer in lieu of making changes, modifications and/or additions to the Facilities pursuant to GCCSubclause 28.3, then the Contractor shall pay liquidated damages at the rate of1.5%for every complete 1% of the excess consumption of the Facilities, or part thereof, of less than a complete 1%.

4.3 Minimum Levels

Notwithstanding the provisions of this paragraph, if as a result of the guarantee test(s), the following minimum levels of performance guarantees (and consumption guarantees) are not attained by the Contractor, the Contractor shall at its own cost make good any

deficiencies until the Facilities reach any of such minimum performance levels, pursuant to GCCSubclause 28.2:

(a) production capacity of the Facilities attained in the guarantee test: 95% of the guaranteed production capacity

and/or

(b) average total cost of consumption of all the raw materials and utilities of the Facilities: 105% of the guaranteed figures.

4.4 Limitation of Liability

Subject to para. 4.3 above, the Contractor's aggregate liability to pay liquidated damages for failure to attain the functional guarantees shall not exceedpercent(20 %) of the Contract price

Performance Security

[*Bank's name, and address of issuing branch or office*]

Beneficiary: ..... [*Name and address of the Employer*] .....

Date:.....

Performance Guarantee No.: .....

We have been informed that [*name of the contractor*](hereinafter called "the Contractor") has entered into Contract No. [*reference number of the contract*]dated[*date*] with you, for the execution of [*name of contract and brief description of plant and services*](hereinafter called "the Contract").

Furthermore, we understand that, according to the conditions of the Contract, a performance guarantee is required.

At the request of the Contractor, we [*name of the bank*] hereby irrevocably undertake to pay you any sum or sums not exceeding in total an amount of [*name of the currency and amount in words*][1][*amount in figures*] such sum being payable in the types and proportions of currencies in which the Contract Price is payable, upon receipt by us of your first demand in writing accompanied by a written statement stating that the Contractor is in breach of its obligation(s) under the Contract, without your needing to prove or to show grounds for your demand or the sum specified therein.

This guarantee shall expire no later than the earlier of

(a) 18 months after our receipt of
   (i) a copy of the Completion Certificate; or
   (ii) a registered letter from the Contractor, attaching a copy of the notice to the project manager that the Facilities are ready for commissioning, and stating that 14 days have elapsed from receipt of such notice (or 7 days have elapsed if the notice was a repeated notice) and the project manager has failed to issue a Completion Certificate or inform the Contractor in writing of any defects or deficiencies; or
   (iii) a registered letter from the Contractor stating that no Completion Certificate has been issued but the Employer is making use of the Facilities; or

(b) the[*date*] day of [*month*], [*year*].

Consequently, any demand for payment under this guarantee must be received by us at this office on or before that date.

This guarantee is subject to the Uniform Rules for Demand Guarantees, ICC Publication No. 458 [*or ICC Publication No. 758 as applicable*], except that subparagraph (ii) of Sub-Article 20(a) is hereby excluded.[2]

. . . . . .
[*Signature(s) and seal of bank (where appropriate)*]

If the institution issuing the performance security is located outside the country of the Employer, it shall have a correspondent financial institution located in the country of the Employer to make it enforceable.

[1] The guarantor shall insert an amount representing the percentage of the contract price specified in the contract and denominated either in the currency(ies) of the contract or a freely convertible currency acceptable to the Employer.

[2] Or the same or similar to this clause specified in the Uniform Rules for Demand Guarantees, ICC Publication No. 758, where applicable.

Advance Payment Security

[*Bank'sname, and address of issuing branch or office*]

Beneficiary: ..... [*Name and address of the Employer*].....

Date: .....

Advance Payment Guarantee No.: .....

We have been informed that [*name of the contractor*](hereinafter called "the Contractor") has entered into Contract No. [*reference number of the contract*]dated[*date*]with you, for the execution of [*name of contract and brief description of plant and services*](hereinafter called "the Contract").

Furthermore, we understand that, according to the Conditions of the Contract, an advance payment in the sum [*name of the currency and amount in words*][1][*amount in figures*] is to be made against an advance payment guarantee.

At the request of the Contractor, we [*name of the bank*]hereby irrevocably undertake to pay you any sum or sums not exceeding in total an amount of [*name of the currency and amount in words*][2][*amount in figures*] upon receipt by us of your first demand in writing accompanied by a written statement stating that the Contractor is in breach of its obligation under the Contract because the Contractor:

(a) used the advance payment for purposes other than the costs of mobilization and cash flow support in respect of the Works; or

(b) has failed to repay the advance payment when it has become due and payable in accordance with the conditions of the Contract, specifying the amount payable by the Contractor.

It is a condition for any claim and payment under this guarantee to be made that the advance payment referred to above must have been received by the Contractor on its account number [*contractor's account number*]at[*name and address of the bank*].

The maximum amount of this guarantee shall be progressively reduced by the amount of the advance payment repaid by the Contractor as indicated in copies of interim statements or payment certificates, which shall be presented to us. This guarantee shall expire, at the latest, upon our receipt of a copy of the interim payment certificate, indicating that 80% of the Contract Price has been certified for payment, or on the [*date*] day of [*month*], [*year*],[3] whichever is earlier. Consequently, any demand for payment under this guarantee must be received by us at this office on or before that date.

This guarantee is subject to the Uniform Rules for Demand Guarantees, ICC Publication No. 458 [*or ICC Publication No. 758 as applicable*].

. . . . . .

[*Signature(s) and seal of bank (where appropriate)*]

-- Note to Bidder --

If the institution issuing the advance payment security is located outside the country of the Employer, it shall have a correspondent financial institution located in the country of the Employer to make it enforceable.

---

1 The guarantor shall insert an amount representing the amount of the advance payment denominated either in the currency(ies) of the advance payment as specified in the contract, or in a freely convertible currency acceptable to the Employer.

2 Footnote 1.

3 Insert the expected expiration date of the time for completion. The Employer should note that in the event of an extension of the time for completion of the contract, the Employer would need to request an extension of this guarantee from the guarantor. Such request must be in writing and must be made prior to the expiration date established in the guarantee. In preparing this guarantee, the Employer might consider adding the following text to the form, at the end of the penultimate paragraph: "The Guarantor agrees to a one-time extension of this guarantee for a period not to exceed [6 months][1 year], in response to the Employer's written request for such extension, such request to be presented to the Guarantor before the expiry of the guarantee."